Studies in Natural Language and Linguistic Theory

VOLUME 46

Managing Editors

Liliane Haegeman, *University of Geneva*
Joan Maling, *Brandeis University*
James McCloskey, *University of California, Santa Cruz*

Editorial Board

Carol Georgopoulos, *University of Utah*
Guglielmo Cinque, *University of Venice*
Jane Grimshaw, *Rutgers University*
Michael Kenstowicz, *Massachusetts Institute of Technology*
Hilda Koopman, *University of California, Los Angeles*
Howard Lasnik, *University of Connecticut at Storrs*
Alec Marantz, *Massachusetts Institute of Technology*
John J. McCarthy, *University of Massachusetts, Amherst*
Ian Roberts, *University of Stuttgart*

The titles published in this series are listed at the end of this volume.

VERB MOVEMENT AND THE SYNTAX OF KASHMIRI

by

RAKESH MOHAN BHATT

University of South Carolina, Columbia

KLUWER ACADEMIC PUBLISHERS

DORDRECHT / BOSTON / LONDON

SUNY - ALBANY
UNIVERSITY LIBRARIES
ALBANY, NY 12222

TABLE OF CONTENTS

Acknowledgments xii
List of abbreviations xiv

1 Introduction **1**
1.0 Preliminary Remarks 1
1.1 Issues and Challenges 2
1.2 Organization of the Book 7
1.3 Theoretical Preliminaries 9
1.3.1 UG and Syntactic Modularity 9
1.3.2 The Different Modules 12
1.3.2.1 X-Bar Theory 12
1.3.2.2 Theta Theory 13
1.3.2.3 Predication Theory 15
1.3.2.4 Government Theory 15
1.3.2.5 Case Theory 17
1.3.2.6 Binding Theory 19
1.3.2.7 Control Theory 19
1.4 Summary 20

2 The Kashmiri Language **22**
2.0 Introduction 22
2.1 Sociolinguistic Profile 22
2.2 Linguistic History of Kashmiri 24
2.3 Notes on Kashmiri Grammar 25
2.3.1 Morphosyntax 25
2.3.2 Syntax 35
2.4 Summary 42

3 Configurationality and Phrase Structure **43**
3.0 Introduction 43
3.1 Kashmiri is not "non-Configurational" 45
3.1.1 Agreement 51
3.1.2 Binding Theory 52
3.1.3 Distribution of PRO 56
3.1.4 Additional Evidence 57
3.1.4.1 Weak Crossover (WCO) 57
3.1.4.2 Constituent Fronting 60
3.1.4.3 Superiority-Like Effects 62
3.2 Word Order Constraints: Kashmiri Phrase Structure 64
3.2.1 N-complements 65
3.2.2 Postpositions 67
3.2.3 Adjectives 67
3.2.4 The Structure of VP 68
3.3. The Functional Projections 71
3.4 Complement *ki* clauses 74
3.5 Summary 79

4 Verb-Second (V2) Phenomena **80**
4.0 Introduction 80
4.1 Kashmiri *Vorfeld* 84
4.1.1 V2 Clauses 85
4.1.1.1 Main Clauses 85
4.1.1.2 *ki*-Clauses 98
4.1.2 V3 Clauses 102
4.1.2.1 Declarative Clauses 102
4.1.2.2 Interrogative Clauses 107
4.2 Some Exceptional Orders 116

4.2.1 V1 Order 116
4.2.1.1 Declaratives 116
4.2.1.2 Yes/No Questions 120
4.2.2 V-Final Order 121
4.2.2.1 Relative Clauses and Adverbial Clauses 121
4.2.2.2 Nonfinite Clauses 126
4.3 Summary 129

5 Motivating Verb Movement 131
5.0 Introduction 131
5.1 The "Standard" Account 131
5.2 Yiddish and Icelandic 136
5.2.1 Diesing (1990) 138
5.2.2 Weerman (1989) 141
5.2.3 Vikner (1991) 146
5.3 Motivating Verb-Second 151
5.3.1 The Composition of Comp 151
5.3.2 A Parametric Theory of V2 154
5.3.3 Subordinators and Complementizers 156
5.4 Explaining Asymmetries 157
5.5 Some Consequences 159
5.5.1 Subordinators and *wh*-movement in Indirect Questions 159
5.5.2 Subordinators and Selection 161
5.5.3 A-V2 Phenomena in Kashmiri 162
5.5.4 Frisian: Liberal A-V2 164
5.6 A (Residual) Problem 165
5.7 Conclusions 167

6 Subject Position, Object Positions, and Case **169**
6.0 Introduction 169
6.1 Object Positions 170
6.1.1 Objects that Move 171
6.1.1.1 Adverb Interpretation 171
6.1.1.2 Specificity and Object Movement 174
6.1.2 Objects that Do Not Move 176
6.1.3 Object Advancement or Specificity Movement? 177
6.1.4 Moved Objects, AGRP, and Specificty 180
6.2 Subject Positions 186
6.2.1 Dative Subject (Psych) Constructions 187
6.2.1.1 Dative Subjects 190
6.2.1.2 Dative Subjects in Kashmiri: "Raising" Arguments 191
6.2.1.2.1 Quantifier Floating 191
6.2.1.2.2 Equi victims: Controlled PRO 193
6.2.1.2.3 Adverbial -ith Clauses 195
6.2.1.2.4 Subject-to-Subject Raising 197
6.2.1.2.5 ECM Constructions 197
6.2.1.3 Dative NP: D-Structure Indirect Object 198
6.2.1.3.1 Case 198
6.2.1.3.2 Passivization 200
6.2.1.4 Additional Evidence 203
6.2.1.5 Conclusions 204
6.2.2 Ergative Subject Constructions 204
6.2.2.1 Passivization 207
6.2.2.2 Nominalization 210
6.2.2.3 Causativization 211
6.2.3 Summary 212

6.3 Case Theory 212
6.3.1 Checking Theory: Chomsky (1991/1993) 213
6.3.2 Kashmiri Case: Problems for Checking Theory 214
6.3.3 A Restrictive Theory of Case and Checking 220
6.3.4 Accusative as "Last Resort" 223
6.4 Accounting for Case Arrays 228
6.4.1 Nominative-Accusative 230
6.4.2 Dative-Nominative 233
6.4.2.1 The Dative (Subject) Case 233
6.4.2.1.1 Verbs of Perception 234
6.4.2.1.2 Verbs Expressing Possession 235
6.4.2.1.3 Verbs Describing Physical Event 236
6.4.2.1.4 Verbs of Psychological State 237
6.4.2.1.5 The Semantic Generalization 239
6.4.2.2 Summary 242
6.4.2.3 "Psych" Movement and Nominative Objects 242
6.4.3 Ergative-Nominative 244
6.5 Nominative Objects in Natural Language Grammars 250
6.5.1 Nominative Objects in Hindi 251
6.5.2 Nominative Objects in Inuit 252
6.5.3 Nominative Objects in Icelandic 253
6.5.4 Nominative Objects in Japanese 254
6.6 Conclusions 255

7 Epilogue 256

References 264
Language Index 279
Name Index 281
Subject Index 285

ACKNOWLEDGMENTS

This book is truly a collaborative effort. Several scholars over the years have shaped the ideas presented in it. Two of them stand out in my mind: James Yoon and Beatrice Santorini. James taught me how to present theoretical analyses that are faithful to data. He was able to navigate my ideas in a direction that invariably yielded promising results. Beatrice has, with her thoughtful, rigorous commentaries on several earlier drafts, vastly improved the contents of this book. Her constant encouragement, attention to detail, and the wealth of knowledge of the V2 field made the task of writing this book seem manageable.

Since the ideas presented in this book evolved over several years, a large number of linguists have contributed toward its progress, through comments, criticism, suggestions, and sometimes simply by making available the relevant research. They include Rajesh Bhatt, Tej Bhatia, Luigi Burzio, Miriam Butt, Alice Davison, Veneeta Dayal, Molly Diesing, Stanley Dubinsky, Hans Hock, Peter Hook, Yamuna Kachru, Baber Khan, Tracy King, Anoop Mahajan, Christer Platzack, Jean Rutten, Carson Schütze, Peter Sells, S. N. Sridhar, Mary Tait, Kashi Wali, Gert Webelhuth, Fred Weerman, Jan-Wouter Zwart, and two anonymous reviewers for Kluwer.

Special thanks to Braj B. Kachru for his guidance over the years, which I treasure, always. His influence on my understanding of general linguistics has been considerable. He has shown me how to be, and stay, productive and committed to my chosen areas of research, and have fun with it too.

Friends usually have a special way of introducing a balance between work and play. I have been lucky to have some around: Mukul, Russell, Marcia, Baber, Isabel, Jill, Ilona, Janina, Shahrzad and David.

Parts of this material were presented, at various stages of development, at the West Coast Conference on Formal Linguistics, Western Conference on Linguistics, Linguistic Society of America meetings, Chicago Linguistic Society meeting, Formal Linguistic Society of Mid-America, and South Asian Language Analysis roundtable. I thank the audiences at all of these conferences for their questions, comments, and suggestions.

I am also grateful to the English Department faculty at the University of Tennessee for their support and understanding while I was finishing this manuscript. I am also grateful for the several Hodges English

summer grants, which made it possible for me to continue research on this book.

Thanks are also due to Steven Gross for proof-reading/copy-editing the manuscript, to Randy Miller for working on the Index and proof-reading, and to Chang-Kyum Kim for help with formatting and other technical wizardry.

It was a pleasure working with Vanessa Nijweide and Susan Jones. I thank them for their enthusiasm, support and assistance.

Finally, for the love, support and understanding they have always provided me, my deepest gratitude go to my parents, Mohani and Mohan Lal Bhatt; to my sister, brother-in-law, and niece, Renu, Sushil and Tanushree; and to my wife, Barbara, gobur Ashish, and gobri Priyasha. It is from all of them that I derive my strength, energy and peace of mind.

LIST OF ABBREVIATIONS

1	first person
2	second person
3	third person
m	masculine
f	feminine
sg	singular
pl	plural
A	accusative Case
N	nominative Case
E	ergative Case
D	dative Case
G	genitive
O	oblique Case
aux	auxiliary verb
Pass	passive
prs	present tense
Fut	future tense
Pst	past tense
Perf	perfective
NPerf	nonperfective
Inf	infinitive
Neg	negative marker
Q	question marker (yes/no)
Ben	Benefactive
caus	causative morpheme
CP	conjunctive participle
CL	clitic
DECL	declarative
SUB	subordinator
INTER	interrogative
NML	nominalizer
DT	derived transitive

CHAPTER I
INTRODUCTION

1.0 PRELIMINARY REMARKS

During the past decade, the study of the properties of head (X^0) movement has yielded theoretically significant explanations of the generalizations that underlie a range of superficially diverse syntactic phenomena, e.g., the word order differences between English and French (Pollock 1989), noun incorporation in Bantu (Baker 1988), and finite verb movement in Germanic languages (Haider & Prinzhorn 1986, Lightfoot & Hornstein 1994).

To date, studies on the movement of the finite verb to clause-second position in (primarily) root contexts, a phenomenon known as verb-second, have been dominated exclusively by the analyses of Germanic languages.[1] The available accounts of verb-second (V2) are thus limited in their empirical coverage; we do not have descriptions of the phenomenon outside the well-known Germanic cases. This book offers, for the first time, a detailed account of finite verb movement (V2 phenomenon) in a language outside of the Germanic family, a relatively unknown and unanalyzed Indo-Aryan language called Kashmiri.

Kashmiri is, undoubtedly, the least well studied of the major Indo-Aryan languages in the context of generative grammatical theory. With regard to Kashmiri syntax, very few studies relevant to current theoretical issues have found their way into print. The present work strives to remedy this lack by examining the syntax of Kashmiri with a twofold purpose. First, there is an attempt to gain deeper insights into the word order facts of Kashmiri by comparing and contrasting them with those found in Germanic. A conspicuous characteristic of Kashmiri as well as Germanic syntax is that finite verbs in root and certain subordinate contexts regularly take the second position, the phenomenon known as verb-second (V2). To that end, a parametric theory of V2 is proposed which restricts the observed variation among V2 languages to the possibilities offered by it. Second, a large and detailed body of Kashmiri data is made available in a form appropriate for testing the theory of verb movement, whose most comprehensive statement is found in Haider and Prinzhorn (1986) and Lightfoot and Hornstein (1994). In detailing the Kashmiri facts, the intention is to

[1] I exclude from the discussion the V2 effects ("NP-type of V-movement") found in Vata and Gbadi (Koopman 1984). In these languages the verb moves to Infl, but when Infl contains an auxiliary, verb movement is blocked.

construct a large body of reasonably clear empirical data that must underlie future theoretical discussions and revisions.

The discussion also includes what I believe to be a fairly comprehensive account of perhaps most of the central and crucial syntactic processes of Kashmiri. In addition, there is a more detailed examination of certain areas in which it is plausible to assume that relevant data have been considered and which, furthermore, promise to contribute to our understanding of the syntactic structure of Kashmiri and to syntactic theory in general.

1.1 ISSUES AND CHALLENGES

In most respects, Kashmiri shares its syntax with other Indo-Aryan languages, e.g., flexible word order, verb agreement, ergativity, and passivization. There are, however, aspects of Kashmiri grammar that are distinct from all other Indic languages in important ways. One important respect in which the grammar of the Kashmiri language distinguishes itself from all other Indo-Aryan languages is the appearance of the finite verb in clause-second position in declarative matrix clauses and *ki* -(subordinate) clauses. All other Indo-Aryan languages are verb-final (see Masica 1989). The verb-second phenomenon that we notice in Kashmiri is in fact the norm in declarative matrix clauses in the languages belonging to the Germanic family (minus English).

In the Germanic languages, the finite verb has a variable position depending on whether the clause in question is a root clause or a nonroot clause with an overt complementizer. In German, for example, the finite verb in root contexts is in the second position of the clause, but in nonroot contexts with an overt complementizer it is in its base-generated clause-final position (den Besten 1983). The neat root-subordinate asymmetry found in Germanic does not, however, obtain in Kashmiri: in root as well as most subordinate contexts the finite verb invariably occupies the clause-second position.

The Kashmiri situation, in this respect, is more akin to Icelandic/Yiddish verb-second where it has been argued (Thráinsson 1986, Diesing 1988, 1990, Santorini 1989) that the finite verb does not occupy the same position as it does in German or Dutch. The problem that arises is the following: What is the structure of verb-second clauses? In German, matrix as well as subordinate clauses are analyzed as Complementizer Phrases (CPs). In matrix clauses the verb moves to Comp accounting for verb-second; in subordinate clauses when Comp is occupied by an overt complementizer, the verb has no place to move, hence, no verb-second (cf. Haider & Prinzhorn 1986, Vikner 1991,

1995, Lightfoot & Hornstein 1994). In Yiddish and Icelandic, on the other hand, matrix clauses are argued to be Inflectional Phrases (IPs), and verb-second is derived by verb movement to Infl. In subordinate clauses, which are CPs, the verb still moves to Infl even in the presence of an overt complementizer in Comp (cf. Thráinsson 1986, Diesing 1988, 1990, Santorini 1989).

Kashmiri introduces another complication to any unified analysis of verb-second. As mentioned above, in Kashmiri, verb-second is found in matrix and subordinate *ki* 'that' clauses. However, in subordinate adverbial clauses and relative clauses the finite verb remains stranded at the end: these clauses are verb-final, just as the German and Dutch embedded clauses.[2] Thus, Kashmiri presents an interesting anomaly, it exhibits verb-second of the Icelandic/Yiddish type (contrast 1a and b with 1c) as well as of the German/Dutch type (contrast 2a and b with 2c).

(1) a. Yiddish (Diesing 1990:42)

Avrom	gloybt	**az**	Max	**shikt**$_i$	avek	v_i	dos
Avrom	believes	that	Max	sends	away		the

bukh
book

b. Kashmiri

Avrom-as	chu	basaan	**ki**	Max-an	**dits**	kitaab
Avrom(D)	is	believes	that	Max(E)	give	book

daaryith
threw

Avrom believes that Max threw the book away.

c. German[3]

Klaus	glaubt	**daß**	Petra	das Buch	**wegschickt**
Klaus	believes	that	Petra	the book	away sends

Klaus believes that Petra will send away the book.

---

[2] Kashmiri, therefore, is an example of what Santorini (p.c.) calls a "liberal" asymmetric V2 language: it falls between "pure asymmetric V2 language" (German, Dutch), and "pure symmetric V2 language" (Yiddish, Icelandic). See also Rambow and Santorini (1995) for some details.

[3] Thanks to Christine Walther, a native of southern Germany, for help with German data.

(2) a. German

der Mann	**den**	Martin	morgen	Abend	sehen	
the man	who	Martin	tomorrow	evening	see	

wird
will

The man who Martin will see tomorrow night.

b. Kashmiri

yus	nafar	khyaam	pagah	raath-kyuth
which	man	Khayaam	tomorrow	night time

vuchyi
see-Fut

The man who Khayyam will see tomorrow night.

c. Yiddish (Diesing 1990:65)

Der yid	**vos**	shabes	bay	nakht	**vet**
the man	that	Saturday	at	night	will

Khayim zen
Chaim see

In sum, the standard account of Germanic verb-second takes Comp to be the landing site for finite verb movement. But, as noted above in (1), such an account does not leave any room for variation found in other Germanic languages such as Yiddish and Icelandic: in these languages verb-second is found even in those finite complement clauses where there is an overt complementizer. Further, Kashmiri subordinate V2 is restricted to only those clauses that are introduced by the complementizer *ki* 'that' ((1b) above); other complementizers do not allow V2 ((2b) above).

Working within the Principles and Parameters framework (Chomsky 1981-1993) where UG is assumed to offer a range of principles and options which can be parameterized in different languages, this study asks, with respect to verb-second, the following question: What is the nature of parametric variation? Or, more precisely, is there an analysis which accounts in a natural way for the observable language variation found in the verb-second languages (e.g., Germanic and Kashmiri)? Therein lies the challenge and the significance of this study. It develops a parametric theory of verb-second which restricts the availability of variation in verb-second languages to the possibilities offered by it.

Another issue that is closely associated with the verb-second phenomenon is the correlation between verb movement and nominative Case assignment to the subject. Some of the most influential accounts of Germanic verb-second assume that the verb moves to Comp to assign nominative Case to the subject (Platzack 1983, Koopman 1984, Tomaselli 1989, Cardinaletti & Roberts 1990, Zwart 1993, Santorini 1994). The standard assumptions of Case in Germanic verb-second languages hold that nominative is assigned to subject position either by Comp or by Infl via government or Spec-Head agreement. This Case motivation for verb movement is untenable for Kashmiri verb-second simply because not all subjects in Kashmiri are nominative — dative subjects of psych predicates and ergative subjects of perfective transitive predicates pose a serious challenge to any account of verb-second motivated by Case-theoretic requirements. In non-subject initial clauses of Kashmiri, the subject occupies the position immediately following the finite verb. Consider, for example, the canonical word order of a nonsubject initial nonnominative construction in Kashmiri, as shown in (3a) and (3b) below:

(3a) Comp Adverb—Verb$_{[finite]}$—Subject$_{[dative]}$—Object$_{[nominative]}$

me	buuz	ki	raath	log	tem-is
I	heard	that	yesterday	got(m)	she(D)

dab
hurt(N,m)

I heard that yesterday she got hurt (she hurt herself).

(3b) Comp Adverb—Verb$_{[finite]}$—Subject$_{[dative]}$—Object$_{[nominative]}$

me	buuz	ki	raath	zaav	tem-is
I	heard	that	yesterday	born(m,sg)	she(D)

nechu
son(N)

I heard that yesterday she had a boy.

The order of the argument NPs in Kashmiri quirky (=nonnominative subject) constructions such as (3) is also found in Icelandic (Zaenen,

Maling & Thráinsson 1985). Data like (3) pose an empirical obstacle to establishing *Case-assignment-to-subject* as a **trigger** for verb-second. Given the order in (3), it cannot be maintained that Kashmiri verb-second interacts with Case assignment: a lexically-assigned dative NP appears in subject position. This NP, which is semantically an Experiencer (Goal or a Possessor), does not trigger verb agreement, but exhibits syntactic properties that are generally associated with subjects in Kashmiri. In other words, the assignment of nominative Case in Kashmiri cannot be tied to either Comp or Infl. Thus, we need an account of Case assignment/checking that extends to both Kashmiri and the Germanic language.

Given the facts so far, we face the first question: Is the dative nominal in (3a) and (3b) a subject, or is it an indirect object, as the dative case marking and the associated theta role may suggest? There are two obvious possibilities. If the dative nominal is analyzed as an indirect object, then we need to account for why these dative NPs show properties of derived subjects. On the other hand, if the dative nominal is analyzed as a subject, then we need to account for its quirky Case and its inability to control verb agreement. A somewhat similar problem exists in ergative constructions where the subject NP is nonnominative (ergative) and the object is nominative.[4] Additionally, there is also the question of how nominative Case is assigned to objects in these non-nominative subject (psych and ergative) constructions. Such data challenge some current assumptions of Case (Economy framework) and Checking (Minimalist Program) theory, particularly that Spec-TP (or AgrSP) is the site for structural nominative Case assignment/checking and that VP-internal subjects move to that site for Case/Checking requirements.

The challenge, then, is to explore the structure of the Kashmiri clause and identify the phrase structure positions where grammatical functions are licensed. This, of course, entails providing an analysis of Case in Kashmiri (and Icelandic) which is independent of the verb-second phenomenon, an account that (i) explains how lexically-assigned Case on the subject NP and nominative Case on the object NP is accomplished, (ii) provides an explanatory account of verb agreement, and (iii) motivates NP movement to the canonical subject position (assuming advancement as the proper analysis of Kashmiri psych constructions).

---

[4] Like many other Indic languages, Kashmiri shows the familiar split-ergative pattern: nominative — accusative in nonperfective clauses and ergative— absolutive (= nominative) in perfective transitive clauses. (see chapter 2 for some discussion)

1.2 ORGANIZATION OF THE BOOK

This section presents an outline of chapters. Chapter 2, *The Kashmiri Language*, presents a descriptive overview of Kashmiri, its geographic distribution, its linguistic history, and its structure. The linguistic history of Kashmiri chronicles briefly how a language like Kashmiri, belonging to and surrounded by robustly verb-final Indo-Aryan languages, developed verb-second. This is followed by a synchronic grammatical description, which is especially necessary because the scholarly linguistic work on Kashmiri is sparse, scattered, and unavailable. The aspects of Kashmiri grammar detailed in this chapter are relevant to the discussion in subsequent chapters, and, at the same time, they represent an important body of information about the grammatical properties of the language hitherto unanalyzed. Chapter 3, *Configurationality and Phrase Structure*, examines the freedom of word order in Kashmiri and its correlation to issues of configurationality. A variety of empirical and theoretical arguments are offered to establish the existence of VP-internal and -external hierarchical structure in Kashmiri, which has been previously analyzed as nonconfigurational. The discussion (i) contributes to the debate whether all languages universally project their arguments configurationally, and (ii) argues against the notion that "free" word order is synonymous with nonconfigurationality. Next, evidence is presented to establish that in Kashmiri all lexical projections are underlyingly head-final, whereas all the functional projections above VP are head-initial. Crucially, it is suggested that there are three functional projections above VP, viz., AGRP, TP, and MP in that order. The head-final character of Kashmiri raises an apparent problem for the distribution of the finite complement *ki*-clauses: they always appear to the right of the matrix clause. An account of this apparent problem closes the discussions of the issues entertained in this chapter. Chapter 4, *Verb-Second (V2) Phenomena*, details the phenomenon of verb-second, beginning with its description in Germanic. A conspicuous characteristic of Germanic syntax is that finite verbs regularly take the second position, a generalization that also holds for Kashmiri. A detailed account of the Kashmiri *Vorfeld* — the position(s) preceding the finite verb — is presented, which leads to several important empirical generalizations about the number and nature of syntactic categories that can precede the finite verb. On close inspection of the Kashmiri *Vorfeld*, it turns out that there is only one Focus position immediately preceding the finite verb, which may be preceded by a contrastive ("as for") Topic (adjoined) position. Additionally, the discussion of relative and subordinate adverbial clauses demonstrates how Kashmiri exhibits both the Yiddish and

Icelandic type as well as the German/Dutch type of V2. After detailing a descriptive sketch of Kashmiri V2, Chapter 5, *Motivating Verb Movement*, begins with a critique of some influential accounts of V2, demonstrating their inadequacy in dealing with Kashmiri data. It then establishes the locus of variation in V2 languages by motivating the existence of a Mood Phrase (MP). A close examination of the category Comp reveals two functions that are, cross-linguistically, associated with it: clause-type (Mood) and subordination marking. Under the assumption that mood-marking (clause-type) is universally required, a parametric account of V2 is proposed that generalizes over all of Germanic and Kashmiri. The chapter then explores the favorable consequences of the proposed parameterized account of V2, providing, among other things, an account of why V2 is blocked in relative and subordinate adverbial clauses in Kashmiri. The remainder of the chapter presents a critique of various V2 accounts that have attempted to account for why the finite verb moves to Comp. Chapter 6, *Subject Position, Object Positions, and Case*, provides arguments to motivate the AGRP and TP projections in the syntactic structure of Kashmiri. Empirical evidence is presented to claim that in Kashmiri, subjects move to a position which corresponds to TP, whereas nominative objects move to a position which corresponds to AGRP. Additionally, building on several proposals of Case in Icelandic, a theory of Case and Checking is developed to account for the distribution of arguments in syntactic structures of natural languages. The Case proposal is able to (i) explain why lexically Case-assigned NPs (nonnominative) must move to the canonical subject position in quirky constructions, and (ii) show how nominative Case is assigned to direct objects in these (quirky) constructions. In addition, some favorable consequences of this Case proposal are explored. Finally, Chapter 7, *Epilogue*, summarizes the main arguments of this study and highlights the contribution of the Kashmiri data toward the understanding of the syntax of verb movement in general and V2 in particular. Some thoughts on possible future research which will make progress toward developing a restrictive theory of V2 are also discussed. Finally, some related issues are addressed which arise from recent developments in syntactic theory.

This book is written within the guidelines of the Government and Binding (GB) theory, better known as the Principles and Parameters framework, as outlined in Chomsky (1981, 1991). The great diversity of approaches to some GB-theoretic notions necessitates a brief introduction to the theoretical foundations on which this work is based. Therefore, in order to situate the reader within the context of the framework assumed here, a discussion of the assumptions of the

Principles and Parameters approach to linguistic theory and the general organization of Universal Grammar follows.

1.3 THEORETICAL PRELIMINARIES

1.3.1 UG and Syntactic Modularity

Ever since *Aspects of the Theory of Syntax* (Chomsky 1965), three issues have guided almost all research in generative grammar:

(4a) What constitutes knowledge of language? (Humboldt's problem)
(4b) How is that knowledge of language acquired? (Plato's problem)
(4c) How is that knowledge put to use? (Descartes' problem)

The generative grammarians have attempted to address these issues by making the plausible hypotheses that language is a unique human faculty and, further, that the capacity to use language is innate rather than learned. These hypotheses assume linguistic theory to be closely tied to a theory of the mental operations that children use in learning their (first) language. Under this view, then, any generalization about the structure and properties of grammars is, by hypothesis, a generalization about the logic of language acquisition.

The stages of language acquisition that every human goes through can be construed in terms of transitory mental states. The initial state is the biological endowment (called Universal Grammar [= Language Acquisition Device]) which appears to be subject to little variation. The initial state, after interaction with some linguistic experience, assumes a steady state at a fixed maturational stage. The steady state, which does not subsequently undergo any fundamental change, is the knowledge of a particular language, the "I-language" in Chomsky's terminology.[5]

Universal Grammar (UG) characterizes a child's prelinguistic state; it specifies the allowable representations and operations that natural languages are confined to use. It follows, therefore, that the properties of natural language grammars are determined by UG. UG, in turn, is described in terms of a rather abstract class of linguistic principles of the initial state. Associated with these principles are a set of parameters

[5] Chomsky (1986a) calls it the "I-language" — the "internalized" (in the mind) and "intensional" aspects of language, and contrasts it with the E-language, which refers to "externalized" and "extensional"— the different aspects of behavior, or even the set of expressions in the language. The term "grammar" is then reserved for a linguist's theory of I-language.

(or options), the values of which a child must infer based on the data presented to him/her.

This view of UG underlies the Principles and Parameters model of language design (Chomsky 1981, 1986a). It provides a straightforward solution to Plato's problem:[6] How does a child learn all the properties of his/her language given the limited linguistic experience? Under this view, language acquisition involves the fixing of parameters, different values of the parameters yield different core grammars,[7] including the lexicon. A *language*, I-language in the sense of Chomsky, then, is a set of specifications for parameters in an invariant system of UG principles. The challenge in any linguistic inquiry, keeping Plato's problem in mind, is to develop theories that are general enough to capture the universal properties of natural languages and, at the same time, flexible enough to account for the observed variation among languages.

Assuming I-language to be a cognitive system responsible for pairing sound and meaning in an unbounded way, the study of generative grammar then narrows down to establishing just how a particular I-language assigns structural descriptions to linguistic expressions of that language. This brings us to what Chomsky calls Humboldt's problem: What is the nature of the generative procedure that enables articulated, structured expressions of thought to be freely produced and understood? The most productive approach to dealing with Humoldt's problem has been to discover deeper properties and principles of natural language grammars that can eventually explain a wide array of complex linguistic phenomena.

Following this methodological logic, and the logic implicit in the Principles and Parameters approach, Humboldt's problem is formulated in terms of a representational-computational theory of the mind/brain. The architecture of the mind is premised on the assumption that mapping between form and meaning involves three fundamental levels of representation— D-Structure, Phonological Form (PF) , and Logical Form (LF)— each constituting an interface of the grammatical system with other systems of mind. LF interfaces with the inferential-conceptual system, PF interfaces with the motor-perceptual system, and

---

[6] Plato's problem, as Chomsky calls it, is the following: why do we know so much given that we have such limited evidence? This relates to "The poverty of stimulus hypothesis", which basically states that in the process of language acquisition, external stimulus plays a very small role due to the poverty of stimulus.

[7] Appended to the core grammar is the "periphery" that must be explicitly learned from positive evidence. The periphery is a result of language contact, historical residue, dielect mixture, etc. Core and periphery together determine the knowledge of language.

D-Structure interfaces with the lexicon. Each level interfaces with the other via S-Structure by means of a generalized operation called Affect Alpha (Affect-α). S-Structure is derivational. This is schematized in (5) below .

(5)

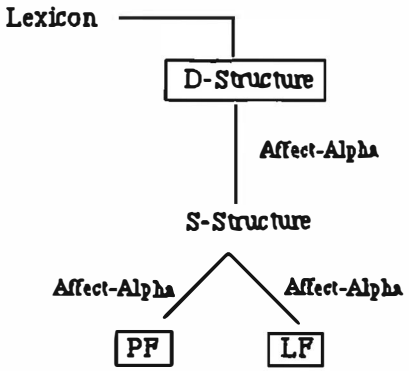

The lexicon is a set of lexical items articulated as a system of features instantiating its idiosyncratic properties, particularly phonetic, semantic, and syntactic. Thus, a lexical entry for a verb, for example, *eat* must specify only those properties that determine its sound, meaning, and syntactic roles; redundant information is omitted.[8]

The D-structure generated by the phrase structure schemata is constrained by the principles of X'-theory. Lexical items, with their thematic and selectional specifications, project at this level from the lexicon. The mapping of the lexicon to the syntactic representations is governed by general principles like the Projection Principle and the Theta Criterion such that lexical specifications match syntactic constituency configurations[9]. In this sense, D-structure is a purely structural instantiation of the thematic properties of lexical items (Speas 1990).

The operations Affect-α and the mapping of D-Structure to S-Structure belong to the domain of syntax. S-Structure is interpreted phonetically at PF and logically at LF. The operations mapping S-

[8] The redundant information — for example, the fact that the verb *eat* together with its complement will form the VP constituent — must follow from general principles, either of UG or those of a specific language (cf. Chomsky 1995:235).

[9] For an excellent discussion on the relationship between the lexicon and syntax, and the principles which generate and constrain D-Structure, see Speas (1990).

Structure onto LF representations belong to LF, and those mapping S-Structure onto PF representations apply at PF. S-Structure is mapped onto PF by the application of deletions, contractions, and stylistic and scrambling rules. The mapping to LF takes place via operations such as Focus interpretation, Quantifier Raising, LF Wh-movement, etc.

These syntactic levels of descriptions are properly related to one another only if they meet the requirements of the Projection Principle stated informally in (6) below (Chomsky 1982:8).

(6) Projection Principle:
θ-marking properties of each lexical item must be represented categorically at each syntactic level: D-Structure, S-Structure, and LF.

This principle ensures that representations at each syntactic level observe the subcategorization properties of lexical item. The Extended Projection Principle adds the stipulation that every clause must have a subject.

The rule Affect-α applies freely, but its output is constrained by the principles belonging to different modules. The properties of a well-formed representation derive from the requirements of subsystems expressed as principles, e.g.,

X-BAR THEORY	THETA THEORY
CONTROL THEORY	CASE THEORY
PREDICATION THEORY	GOVERNMENT THEORY
BINDING THEORY	

1.3.2 The Different Modules

One virtue of the Principles and Parameters approach is that broad surface syntactic differences derive from subtle differences in the application of the various modules of the grammar. Below, I summarize the specific version of the principles associated with each of the theories (modules) that I will adopt in our discussion of the Kashmiri syntax in this book.

1.3.2.1 X-Bar Theory

This module (subtheory) determines how lexical items are put together into phrases. It constrains the set of allowable phrase markers. The format of phrasal projection for all lexical categories (Noun, Verb, Prepositions, Adjectives) as well as functional categories (AGR, Tense,

Determiner, Comp) is given in (7), where X, Y, and Z range over the category types.

(7a) XP ---> ZP X'
(7b) X' ---> X YP

A number of relations can be defined on the schemata presented in (7). For example, X is said to be the *head* of X', and X' the head of XP as indicated in (7b) and (7a), respectively. YP is the *complement* of the head X and ZP, its *specifier*. We understand ZP as subject of X' and YP as the object of X.

Following Kuroda (1986), Kitagawa (1986), Koopman and Sportiche (1991), Deprez (1989), among others, I will assume the VP-internal subject hypothesis. The projection VP, according to this hypothesis, designates a clause (= clausal projection) containing the subject. In other words, the subject is generated at D-Structure within the maximal projection of the verb.[10] The virtue of this approach is that subjects, like objects, are θ-marked within the maximal projection of the verb.[11]

The order of the head and other constituents (e.g., complement, specifier) is subject to cross-linguistic variation. Some proposals derive word order variation by parameterizing headedness. Accordingly, languages vary with respect to the position of the head vis-à-vis other constituents. Thus Irish, Welsh, and Arabic are analyzed as head-initial languages whereas Hindi and Japanese are head-final. Other proposals derive word order variation by parameterizing theta-marking properties of the head: languages will be head-initial if theta-marking is to the right and head-final if theta-marking is to the left.

1.3.2.2 Theta Theory

Theta theory is a theory of thematic relations. It is concerned with the predicate argument structure[12] and the thematic role with which each

---

[10] See Koopman and Sportiche (1988), Deprez (1989), Woolford (1991), Burton and Grimshaw (1992), and McNally (1992) for a good discussion on the theoretical and empirical consequences of the VP-internal subject hypothesis.

[11] Since only lexical categories are θ-markers, and further, since θ-marking is local, then it is only reasonable to assume that subjects are θ-marked within the maximal projection of the θ-marking head V.

[12] Also known as the theta grid, the Predicate Argument Structure (PAS) determines exactly how many arguments a predicator takes, and organizes them for appropriate mapping into synatx (Speas 1990).

argument is associated. In other words, this subtheory explains how theta roles are represented in linguistic structure or, more precisely, how semantic dependencies are represented in the grammar.

Theta roles are assigned by a lexical head to its complement(s) or/and to its specifier, as defined by X'-theoretic assumptions. The class of theta roles includes Agent, Theme/Patient, Goal, Instrument, Benefactive, etc. These theta roles describe the relation that holds between an argument and its predicator.

The fundamental principle of theta theory is the Theta Criterion (Chomsky 1986a:97) stated in (8).

(8) Theta Criterion:
Each argument α appears in a chain containing a unique, visible[13] theta position P, and each theta position P is isible in a chain containing a unique argument α.

The Theta Criterion (8) mandates a biuniqueness condition on theta role assignment: each argument is assigned one and only one theta role, and each theta role is assigned to one and only one argument. The ungrammaticality of sentences like (9b) and (9c) below is due to violations of Theta Criterion. In (9b), the argument *John* is not associated with any theta position, whereas in (9c) the argument *John* is associated with two theta positions.

(9a) She ran.
(9b) *She ran John.
(9c) *John hit. (as in John hit himself)

The Theta Criterion thus captures the one-to-one correlation between theta role assignment and the referential expression which fills the theta position. Theta positions are those positions to which theta roles are assigned. Theta-bar positions are positions to which theta roles are not assigned. All arguments are supposed to occupy theta positions at D-Structure, which is a "pure" representation of thematically relevant grammatical relations (Chomsky 1986a). The configurations within which thematically relevant grammatical relations are realized at D-structure are constrained by the Uniformity of Theta Assignment Hypothesis (UTAH) proposed by Baker (1988:46) given in (10) below.

(10) UTAH: Identical thematic relationships between items are represented by identical structural relationships between those items at the level of D-Structure.

---

[13] A position is "visible" only if the chain it is in is Case-marked.

The thematic hierarchy (cf. Speas 1990) given in (11) imposes order on the arguments in a theta grid.[14] The argument variables in a theta grid come to be associated with correct syntactic positions as a consequence of UTAH and the Theta Criterion.

(11) Agent < Experiencer < Theme < Goal/ Source/ Location < Manner/Time

1.3.2.3 Predication Theory

This subtheory, notes Baker (1988), is partly related to theta theory.[15] Predication is a mechanism of coindexation which relates a subject and a predicate, each c-commanding the other (Williams 1980, Rothstein 1983). The predicate can be any maximal projection which does not receive a theta role. Since VP never gets a theta role, it is always a predicate. In this view then, predication fulfills the "Extended" requirement of the Extended Projection Principle: clauses must always have subjects. Predication holds not only of canonical subjects and predicative VPs as in (12a), but also of noncanonical predication pairs as in (12b). In (12b), the AP is predicated of the object of *paint*.

(12a) John painted the wall.
(12b) John painted the wall blue.

1.3.2.4 Government Theory

Government is a locality relation holding between two items. The most important principle of this module is called the Empty Category Principle (ECP), as stated in (13).

(13) <u>ECP</u>: Traces must be properly governed.

Proper Government and other related notions are defined below.

(14) <u>Proper Government</u>: α properly governs β iff
α θ-governs β or
α antecedent governs β

---

[14] The theta grid is similar to the argument structure (see note (10 above). The theta grid of a verb like *CUT* can be represented as CUT: <x, y>, where x and y are argument variables.

[15] However, see Heycock (1994) for arguments to claim that predication theory is not reducible to theta theory.

(15) Theta Government: α θ-governs β iff
α is an X^0 and θ-marks β
α and β are sisters

(16) Antecedent Government: α antecedent governs β iff
α and β are coindexed
α c-commands β

(17) Government: α governs β iff α c-commands β and there is no category γ such that γ is a barrier between α and β

(18) C-command: α c-commands β iff neither α nor β dominates the other and every γ that dominates α dominates β[16]

(19) Barrier: γ is a barrier for β iff (i) or (ii):
(i) γ immediately dominates δ, δ a blocking category (BC) for β
(ii) γ is a BC for β, $\gamma \neq$ IP

(20) Blocking Category (BC): γ is a BC for β iff γ is not L-marked and γ dominates β

(21) L-marking: Where α is a lexical category, α L-marks β, iff α θ-marks β or β agrees with the head of γ that is θ-governed by α

(22) Domination: β is not dominated by α unless all segments of α dominate β

---

[16] Where γ is a maximal projection, α m-commands β.

Relevant to the theory of government is the Minimality Condition which, given the configuration in (23) below, protects β from government by α in the presence of a closer governor, i.e., δ, irrespective of whether or not γ is a barrier.

(23) Minimality Condition: Given the configuration ...α ...[γ ...δ ... β ...], α does not govern β if γ is a projection of δ such that it excludes α but immediately dominates β

(24) Exclusion:[17] α excludes β if no segment of α dominates β (In the structure given below, β is neither dominated nor excluded by α)

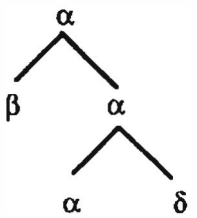

1.3.2.5 Case Theory

Case theory, as it is generally assumed in Chomsky's framework (1981, 1986a), accounts for some of the formal properties of overt NPs: it restricts the distribution of overt NPs to Case-marked A-positions due, mainly, to the Case-Filter (Chomsky 1981:175) given below.

(25) Case Filter: *[NP], if NP has phonetic content (i.e., is lexical) and has no Case.

The contrast between the English sentences in (26) is then attributed to the Case Filter (25), which requires NPs to have Case. The contrast in (26) is explained by making the standard assumption that passive

[17] The notion segment of a category refers to dominant relations in adjunct structures. So, in the structure (22), the category α is said to have two segments both labelled α.

verbs do not assign accusative Case and, at the same time, do not assign a (external) θ-role to the subject position. This assumption yields the contrast in the following way: in (26a) Caseless *John* moves to the θ-less subject position to be assigned Case; in (26b) *John* is *in-situ* and Caseless and, therefore, ungrammatical due to the violation of the Case-Filter.[18]

(26a) John$_i$ was expected t_i to date Mary.
(26b) *It was expected John to date Mary.

Chomsky (1986a) suggested that the Case filter follows from the Visibility Condition, which essentially says that the head of a chain must be Case-marked for the chain to be visible for theta role assignment at LF. Case assignment, like theta assignment, then, is a property of Chains: both are required for licensing A-chains (note the Chain Condition given in (27)).

(27) Chain Condition: If C = (a_1, . . ., a_n) is a maximal chain, then a_n occupies its unique theta position and a_1, its unique Case-marked position.

Case may be either Inherent (presumably closely linked to theta roles) or Structural (dissociated from theta roles). In Chomsky's framework (1986a), it is assumed that Inherent Case is assigned at D-structure under government by a theta-assigner and realized at S-structure under government by either the same or some other element. Structural Case is assigned and realized by the Case assigner at S-structure under the government configuration.

Generally, nominative Case is assigned by (AGR in) Infl as a concomitant of agreement, which may or may not involve government (cf. Chomsky 1981:172). The verb assigns accusative Case to a sister with which it is in a government relation. This explains the adjacency requirements in English as shown in (28).

(28a) *Mary put on the table the book
(28b) *Mary will give probably the book to Bill
(28c) Mary probably will give the book to Bill
(28d) *John is dating seriously Mary.
(28e) John is seriously dating Mary.

Another assumption about Case theory that needs to be addressed here is that accusative Case can be assigned across clause boundaries to

[18] In chapter 6, we challenge this Case-theoretic approach to NP-movement and propose a version of Case theory that is able to handle cases of NP-movement in Kashmiri where the moved NP already has Case.

Spec-IP in ECM contexts in English with *believe* verbs, to Spec-CP in French in cases of wh-extraction under *croire* 'believe' type verbs (Kayne 1981), and to the subject of small clauses (Haegeman 1991). In all of these cases, it is assumed (Chomsky 1986a:11) that if a head governs a phrase, then it also governs the Spec of the phrase making accusative Case assignment possible in ECM contexts and in Specs of CP and small clauses.

1.3.2.6 Binding Theory

This subtheory regulates the interpretation of NPs. It is concerned with the relation of anaphors and pronominals to their antecedents. The principles of this theory that govern the necessary relations between different NPs in a clause are stated in (29) below.

(29) Principle A: An anaphor (i.e., reflexive or a reciprocal) is bound in its governing category.
Principle B: A pronominal is free in its governing category.
Principle C: An r-expression (i.e., nonanaphor, non-pronominal) is free.

(30) A category α binds a category β if β is co-indexed with and c- commanded by α.

(31) Governing Category: A governing category for α may be defined as the minimal category containing α, a governor for α, and an accessible subject.

1.3.2.7 Control Theory

Control Theory establishes the possible antecedents of PRO.[19] However, this subtheory is still not clearly understood. This module relies crucially on an interaction of syntax, semantics, and pragmatics. PRO, as a consequence of Extended Projection Principle, occurs in ungoverned positions. Its anaphoric interpretation is possible with predicates like *try* and *decide* as shown in (32) below. Both (32a) and (32b) are an instance of *obligatory control:* in each case, the antecedent of PRO is the subject of the matrix clause.

[19] In GB framework, PRO is a nonovert pronominal anaphor.

(32a) Mary$_i$ tried PRO$_i$ to leave.
(32b) Mary$_i$ decided PRO$_i$ to fire John.

There are other instances of *nonobligatory* control. Consider the example (taken from Sells 1985) (33) below.

(33) Mary said that it is necessary PRO to cut the grass in the winter.

Example (33) shows that PRO can be interpreted with Mary or someone salient in the discourse or just about anyone. The "just about anyone" interpretation is an instance of *arbitrary* control also evidenced in sentences like "*PRO to err is human* ".

1.4 SUMMARY

The central objective of this book is to provide a principled account of the structural differences that exist among the various verb-second (Germanic and Kashmiri) languages. As noted above, an important characteristic of Germanic syntax is that finite verbs in root contexts regularly take the second position, the phenomenon known as verb-second (V2). As mentioned earlier, this book is a first attempt toward an exhaustive treatment of the properties of finite verb movement to clause-second position (V2) in an unfamiliar language, Kashmiri. This type of case study is essential in theoretical linguistics, as the investigation of individual languages provides independent evidence for the validity of a particular theory as a model of grammar. Accordingly, this book is both a case study of Kashmiri and a testing ground for V2 Theory and its recent developments. The book demonstrates how descriptive studies can be illuminating for theoretical issues and how, conversely, theoretical developments enable us to understand linguistic variation.

Because the details of the syntax of verb movement in Kashmiri require an understanding of the relevant grammatical properties of the language, this book also presents the reader with a succinct, descriptive overview of the grammar: morpho-syntax and syntax. Further, this book offers convincing arguments to support the claim that Kashmiri is configurational and, thus, provides more empirical support for the claim that, universally, all languages project their arguments configurationally (cf. Speas 1990).

Most of the Kashmiri data presented in this study has not been previously observed and analyzed within a theoretical framework making it a valuable resource for Kashmiri (and Germanic) specialists, as well as for more general syntacticians. The areas chosen in this book are those that will be of interest to linguists concerned with

language variation and language typology, as well as to those concerned with the scope of recent developments of theoretical syntax in the Government and Binding framework.

This book is, as it will become clear in the following chapters, an exercise in theory and description in generative syntax and will appeal to students and scholars of syntactic typology, comparative syntax, and syntactic theory.

CHAPTER 2
THE KASHMIRI LANGUAGE

2.0 INTRODUCTION

In 1911, Grierson wrote a manual of "an interesting and little known tongue," Kashmiri.[1] Now more than eighty years later, it still remains interesting and yet little known. It is indeed unfortunate that after the monumental work done by Grierson around the turn of this century, the number of studies on Kashmiri that found their way into print remains abysmally small.[2] Although Kashmiri has been influenced largely by other Indo-Aryan languages, it stands uniquely among its Indo-Aryan sisters on a number of phonological and morphosyntactic processes. In this chapter, I will discuss some salient characteristics of Kashmiri beginning with its sociolinguistic profile, continuing with its linguistic history, mainly, the controversy that sorrounds its genetic affiliation, and finally turning to the details of some aspects of its morphosyntactic structure that are, by and large, unique to it. The discussion of grammar will also facilitate comprehension of the data while, at the same time, serve as a reference tool for the remainder of the work.

2.1 SOCIOLINGUISTIC PROFILE

The Kashmiri language, called [kə:ʃ̆ur] by its native speakers, is spoken mainly in the Kashmir province of the state of Jammu and Kashmir (J&K), a language area covering approximately 10,000 square miles. J&K state is the northernmost state of the republic of India, bordering Pakistan on the West, Tibet on the East, Afghanistan, (what used to be) the Soviet Union, and China on the North, and Punjab on the South. The Kashmiri language is surrounded by Dardic languages in the north, Tibeto-Burman languages in the east, Punjabi and Pahari dialects in the west, and Dogri and other Pahari dialects in the south.

---

[1] The importance of investigating Kashmiri was recognized in the mid-nineteenth century, for among other things, Kashmiri was believed to "reveal the manner in which the new cases of the declensions have been formed from the old bases, a point which in other (Indian) languages is exceedingly difficult" (Lawrence 1895:455 quoting Bühler (n.d.), see also Leech 1844).

[2] The most prolific among Kashmiri scholars is Peter E. Hook, who was the first to observe, as far as I am aware, the verb-second word order of Kashmiri.

There are about 3,076,398 native speakers of Kashmiri in the state of J&K.[3] The districts of J&K state, Anantnaag, Baramula, and Srinagar—known also as the Kashmir Valley—account for 90% of the total number of speakers of this language. In all other districts, Kashmiri speakers are in a very small number, ranging from 769 in Ladakh to 145,410 in Doda.

The variation in Kashmiri has been discussed at some length by Kachru (1969) and Grierson (1911). Several dialects of Kashmiri have been identified, mainly in terms of social dialects and regional dialects. The social dialects are what Grierson (1911) calls Hindu Kashmiri—the variety of Kashmiri spoken by Hindus — and Musalmaan Kashmiri — the variety of Kashmiri spoken by Muslims. Kachru (1969) analyzes this variation in terms of Sanskritized Kashmiri and Persianized Kashmiri; the grammar of the former shows the influence of Sanskrit, whereas the grammar of the latter demonstrates the influence of Persian. The generalizations about Kashmiri syntax discussed in this book hold for both varieties of this language.

The regional dialects of Kashmiri are broadly classified into those that are spoken within the Kashmir Valley and those spoken outside it. The dialects spoken within the Valley are *mara:z*, which is spoken in the southern and southeastern region of the Valley; *kamra:z*, which is spoken in the northern and northwestern region of the Valley; and *yamra:z*, which is spoken around Srinagar area. The variety *yamra:z* is regarded as the standard variety.

In addition to this local variation, Kashmiri is also known to have the following regional dialects: Kishtwari,[4] spoken in the valley of Kishtwar, which lies to the southeast of Srinagar; Poguli, spoken in the valleys of Pogul, Paristan, and Sar, and to the south of the Pir Pantsal range; Siraji, spoken in Doda; and Rambani, spoken in Ramban, a small town on the road connecting Jammu and Kashmir.

---

[3] These figures are taken from the census reports of the Government of India. These figures do not include Kashmiri speakers settled in Pakistan or the rest of India.

[4] According to Leech (1844:398), Kishtwari is a "mixture of Cashmeeree [Kashmiri] and Punjabee." However, Grierson and Kachru regard it as the "real" dialect of Kashmiri.

2.2 LINGUISTIC HISTORY OF KASHMIRI

This section briefly discusses the question of the linguistic affiliation of Kashmiri and the question of word order [S-AUX-O-MV].[5] The origin of Kashmiri is controversial as is its linguistic affiliation. Leech (1844: 398) claims that Kashmiri is "without doubt of Sanskrit origin, but has been considerably corrupted by the number of Persian words grafted on it by the Mahommedan conquerors of the province." Grierson (1915:270), on the other hand, in a well argued paper, concludes that:

> Kashmiri is a mixed language, having as its basis a language of the Dard group of the Pisacha family allied to Shina ... its [Kashmiri] vocabulary is now of Indian origin and is allied to that of the Sanscritic Indo-Aryan languages of northern India. As however, its basis, — in other words, its phonetic system, its accidence, its syntax, its prosody, — is Pisacha, it must be classed as such, and not as a Sanskritic form of speech.

Grierson thus considers Kashmiri separate from the Indo-Aryan languages; he considers it a Dardic (Pisacha) language. In a later study, Chatterji (1963:256) confirmed Grierson's observation that Kashmiri is a result of a very large overlaying of a Dardic base with Indo-Aryan elements. There are, however, several recent works, particularly those of Koul & Schmidt (1984) and Zakharyin (1984), that have converged to the conclusion that Kashmiri belongs to the Indo-Aryan family. I will assume Kashmiri belongs to the Indo-Aryan group.

Turning to the word order facts, which is one of the diagnostics Grierson uses to separate Kashmiri from Indo-Aryan languages, Grierson observes (1911:64):"in a Kashmiri direct sentence the (word) order more nearly approaches that of English."[6] The most striking difference between Kashmiri and other Indo-Aryan (Hindi) and Dardic (Bashgali, Pashai, Ashkund, Gujuri) languages is the occurrence of the verb-second constraint in Kashmiri and in its dialect Kishtwari. There are, however, two dialects of the neighboring Himachali, Kotgaṛhi and Koci (see Epilogue) that exhibit properties of a verb-second constraint similar to Kashmiri.

It is possible to make a diachronic claim that Kashmiri is going through a process of change from Old Kashmiri S-O-V order to the

---

[5] Lawrence (1895:454), quoting Bühler (n.d.), notes that "Kashmiri is a Prakrit, one of the languages descended from the Sanskrit, or rather from one of the dialects out of which the classical Sanskrit was formed. It differs, however, very considerably from all its Indian sister-tongues."

[6] Contrast this with the observations made by Kachru (1973:71) that "the preferred order of elements in a Kashmiri sentence is subject, verb, and object (e.g., si:li cha cava:n cay 'Sheila' 'is' 'drinking' 'tea').

modern Kashmiri S-V-O order in a manner similar to the changes found in the Niger-Congo languages of Africa (Hyman 1975, Givon 1975) as well as the Germanic, Romance, Slavic, and Baltic languages (Hock 1986). Although I have no robust empirical evidence to support this claim, two diagnostics lead to this conclusion, albeit tentative. First, assuming that, historically, dependent clauses always lag behind in the process of word order change (cf. Hock 1986:329-336, for cross linguistic historical evidence), then the verb-final order found in modern Kashmiri relative and adverbial clauses can be taken as evidence of an older S-O-V stage. Second, if the "staging hypothesis" of word order change of Steele (1977a, b) and Hock (1982) can be maintained — viz., that the earliest stage comprises the cliticization of sentence-final AUX and its movement to the sentential-second position — then an argument can be made for Kashmiri word order shift. There is, in fact, phonological evidence in Kashmiri for the clitic status of AUX: Middle Indo-Aryan *acch-* 'be' underwent clitic shortening in Kashmiri to *ch-* . As a result of the cliticization, AUX was placed between the subject and the object to give the order S-AUX-DO-MV (cf. Hock 1982, 1986). This may follow another stage where the main verb follows AUX and all members of the constituent verb occur in clause-second position giving the order S-AUX-MV-DO. I will leave the full exploration and exegesis of this hypothesis for future research.

2.3 NOTES ON KASHMIRI GRAMMAR

In her dissertation, Raina (1991:xiii) correctly notes that very "little work has been done on Kashmiri within the framework of any modern grammatical theory." The only descriptive grammar available of Kashmiri was written by Grierson and published roughly eighty years ago. The other work, Kachru's (1969) *A Reference Grammar of Kashmiri*, was circulated but never published. Other than these two works, the scholarly linguistic work in the phonology, morphology, and syntax of Kashmiri is sparse, scattered, and unavailable. In the next two subsections, then, a brief grammatical sketch of Kashmiri is presented with a twofold purpose in mind: (i) to introduce an important body of information about the grammatical properties of this hitherto unanalyzed language and, (ii) to help the reader better understand the discussion of the Kashmiri data in the subsequent chapters.

2.3.1 Morphosyntax

The morphosyntax of Kashmiri deserves some detailed consideration since the morphology and syntax of this language are closely related. I

will briefly discuss derivational morphology, both nominal and verbal, as well as inflectional morphology, the latter in considerably more detail.

Nominal derivation is mainly deverbal, although the derivation of nouns from adjectives is also quite common, as shown in (1).

(1)	Adjective	Nouns	
	gə'.ɾiib	gə.rii'.bi	'poor'
	be'.kaar	be.kəə'.ri	'useless'

The most productive way of deriving nominals from verbs is by suffixing the gerundive *-un* to the verb root (2). Note that it has the same form as infinitives which function as verbal elements within the VP.

(2a)	paasan	khatr behch-un	(2b)	laRk-sund	vad-un
	money(O) for	beg-ing		boy-G	cry-ing
	begging for money			boy's crying	

Turning now to verbal derivation, I will briefly discuss derived transitives (DT), passives, and causatives. Derived intransitives, mainly obvious borrowings from Hindi-Urdu, are rare in Kashmiri and will not be discussed here. Derived transitives reflect a rich paradigm in Kashmiri. Although there are several phonological patterns that relate intransitives to their derived counterparts, I will discuss the three most productive processes. They are shown in (3).

(3a) Adding *-inaav*[7]

(3ai)	su	chu	as-aan
	he(N)	is	laugh-NPerf

He laughs

[7] The suffix *-inaav* is also used as causative suffix when a transitive stem ends in a consonant. The vowel-final stems use the causative suffix *-aav*. The causatives, however, differ from derived transitives in both semantics and syntax. The agent of a causative has some intermediary carrying out the action without him/herself participating directly. This intermediary is always marked by a postposition *-athyi* (by) denoting the intermediate agent of the causative (see example (5). The agent of the derived transitive directly participates in the action -- the postposition *-athyi* never appears with a derived transitive. The morpheme *-inaav* thus seems to exhibit homonymy.

(3aii) su chu asyi as-inaav-aan
he(N) is us(D) laugh-DT-NPerf

He makes us laugh.

(3b) Adding *-iraav*

(3bi) kalam phuT
pen(N) broke

The pen broke.

(3bii) su chu kalam phuT-iraav-aan
he(N) is pen(A) break-DT-NPerf

He is breaking the pen.

(3c) Adding *-aav*

(3ci) traffik chu ruk-aan
traffic(N) is stop-NPerf

The traffic stops.

(3cii) tse chuk traffik ruk-aav-aan
you(N) is traffic(A) stop-DT-NPerf

You are stopping the traffic.

The passive is marked by the suffix *-ni*.

(4) kitaab aas koryan di-ni
book(N) was girls(D) give-Pass

yivaan
came-NPerf

The book was given to the girls (by someone).

The causative affix is represented most commonly by *-inaav* when the verb stem ends in a consonant.

(5) su chu me maTaras-athyi hindi
he(N) is me(D) teacher(O)-by Hindi(A)

par-inaav-aan
read-Cause-Perf

He is having the teacher teach me Hindi.

Kashmiri is also robustly inflectional, both nominal and verbal. The nominal system exhibits a rich array of Case declensions: Nominative (/Accusative), Dative, Ablative, Ergative, and Genitive. Before a detailed presentation of these Cases, let me discuss three assumptions that will help with the interpretation of the Kashmiri data. First, I will assume, here (especially section 2.3.4) and throughout the book, that the absolutive Case and the nominative Case are morphologically the same (see Manning (1996:183-185) for various arguments supporting this assumption). Second, since both nominative and accusative are morphologically unmarked, I will make the standard assumption and gloss the morphologically unmarked Case-bearing NP not controlling verb agreement as accusative Case, whereas the unmarked Case-bearing NP triggering verb agreement I will gloss as nominative Case. Finally, I will also assume that in Kashmiri, specific, nonnominative theme object NPs are marked with dative Case, not accusative Case as one may argue for a related Indo-Aryan language like Hindi. The empirical support for this third assumption comes from the behavior of enclitics in Kashmiri. In the data (6a-c) below, I show that the coreferents of the dative clitic *-am* include subject (6a), indirect object (6b), and (specific) direct object (6c).

(6a) me chI yi kitaab kharaan
I(D) prs-f,sg this book(N, f,sg) dislike-NPerf

I hate this book.

(6a') yi kitaab ch-*am* kharaan
this book(N,f,sg) prs-CL(D) dislike-NPerf

I hate this book.

(6b)	tsI	chukh	me	kitaab
	you(N,m,sg)	prs-2,m,sg	I(D)	book(A)

divaan
give-NPerf

You are giving me a book.

(6b')	tsI	chuh-*am*	kitaab	divaan
	you(N,m,sg)	prs-2,m,sg-CL(D)	book(A)	give-NPerf

You are giving me a book.

(6c)	tsI	chukh	me	vuchaan
	you(N,m,sg)	prs-2,m,sg	I(D)	see-NPerf

You see me.

(6c')	tsI	chuh-*am*	vuchaan
	you(N,m,sg)	prs-2,m,sg-CL(D)	see-NPerf

You see me.

Further, it turns out that in Kashmiri, accusative theme objects are linked with ergative clitics. This is shown in (7) below.

(7a)	swa	chus-*an*	bI	vuchaan
	she(A)	prs-(1,m,sg)-CL(E)	I(N,m,sg)	see-NPerf

I see her (Lit. I am seeing her).

(7b)	tsI	chakh-*an*	(tem)	vachmats
	you(N,f,sg)	prs-(2,f,sg)-CL(E)	he(E)	see-Perf

He has seen you.

In (7a), the ergative clitic *-an* is coreferent with the accusative object, whereas in (7b) it is coreferent with the (optional) ergative subject NP. Consistent with the patterns of Case-marking of dative and accusative NPs in (6) and (7), I will assume the unmarked theme NP to be accusative and the specific, morphologically Case-marked theme NP to be dative. With these assumptions, I turn next to the description of the nominal inflections.

Nominative and accusative Case are instances of ø-marking. Nominative Case is governed by Infl (AGR) and accusative is governed

by the verb. A nominative Case-bearing (ø) NP triggers predicate agreement, while a ø-marked accusative NP is identified by its inability to trigger predicate agreement. This is shown in (8) below, both the subject and the object have zero (ø) inflection, but only the nominative NP controls agreement.

(8)	azkal	ch-u-s	ba[ø]	kooryi[ø]
	these days	prs-m,sg-1	I(N,1,m,sg)	girls(A)
	vuchaan			
	see-NPerf			

These days I am looking at (many) girls (as marriage prospects).

The ablative Case is represented by *-i* 'singular', and *-av* 'plural'. The dative Case is governed by the verb. It is represented by *-as* 'masculine singular', *-i* 'feminine singular', and *-an* 'plural'. The dative paradigm is presented below in (9).

(9)

Masc		Gloss
Singular	Plural	
laRk-as	laRk-an	boy
baay-is	baay-an	brother
zang-as	zang-an	leg
meez-as	meez-an	table

Fem		Gloss
Singular	Plural	
koory-i	koory-an	girl
beny-i	beny-an	sister
nary-i	nary-an	arm
kitaaby-i	kitaab-an	book

The dative Case in Kashmiri is also governed by postpositions as shown in (10); here I follow the tradition of referring to the Case assigned by postpositions as oblique (O).

(10a)	meez-as nish	meez-as pyaTh	meez-as tal
	able-(O) near	table-(O) on	table-(O) below
	near the table	on the table	below the table

(10b)	beny-i	khatr	beny-an	khatr
	sister-(O)	for	sisters-(O)	for
	for the sister		for the sisters	

The ergative Case is marked by *-an* 'masculine singular', *-i* 'feminine singular', and *-av* 'plural'. This is illustrated by the paradigm given below in (11).

(11)	Masc		Gloss
	Singular	Plural	
	laRk-an	laRk-av	boy
	baay-an	baay-av	brother
	maasTar-an	maasTar-av	teacher
	Fem		Gloss
	Singular	Plural	
	koory-av	koory-i	girl
	beny-av	beny-i	sister
	zanaany-i	zanaany-av	lady

The genitive Case has the largest distribution: *-un* 'animate masculine singular proper noun', *-uk* 'inanimate masculine singular', *-sund* 'other animate masculine singular', *i+und* 'feminine singular', *-an+(h)und* 'plural'.[8] The distribution of genitive is presented below in (12). Notice in (12) that Kashmiri employs genitive Case suffixes, as in (12a) and (12b), and the genitive postposition *-sund*, as in (12c) - (12f). When the genitive postposition is employed, the nominal on the left appears with oblique (dative) Case (compare with (9) and (10) above).

(12a)	jaan-un	vad-un	(12b)	kul-uk	byool
	John-(G)	cry-Nom		tree-(G)	seed
	John's crying			tree's seed	
(12c)	huun-a-sund	gar	(12d)	kitaaby-i-und	saf
	dog-(O)-(G)	house		book-(O)-(G)	page
	dog's house			book's page	

[8] The plural (and oblique) form of *sund* and *hund* is *sindy* and *hindy*, respectively.

(12c) shury-an-hund mool
kids-O)-(G) father

kids' father

(12f) koory-an-hund mool
father girls-(O)-(G) father

girls' father

The discussion of genitive Case brings up another interesting phenomenon found in Kashmiri, the phenomena of Case stacking. (13a) is a typical genitive construction, but when a postposition follows the possessed noun, as shown in (13b), the possessor is marked genitive and oblique (dative), in that order. The construction in (13b) can be analyzed by assuming that either the postposition assigns morphological dative Case to both *house*, as well as the noun *kids*, or by assuming that the postposition assigns morphological dative to *house* only and that the possessor NP is assigned dative by virtue of modifier-noun agreement.

13a) shury-an-hund gar
kids-(O)-(G) house

Kids' house.

(13b) shury-an-hindy-an gar-an manz
kids-(O)-(G)-(O) house-(O) in

In kids' houses.

Let us now turn to the verbal inflections, specifically the order of affixes on the verb. The whole set of Kashmiri verbs is divided into intransitives and transitives. The difference between the two sets is inflectionally marked. This morphological difference shows up most clearly in the opposition between intransitive and transitive conjugations (14a) and in the (obligatory) use of second person enclitics (14b).

(14a) shong-**us** vuch-**um**
(I) slept-m,sg,intransitive (I)saw-m,sg,transitive

(14b) shong-**ukh** vuch-**uth**
(You) slept-2CL (You) saw-2CL

The finite verb generally inflects for number, person, and gender as the agreement facts of the auxiliary verb in (15) show.[9] In the future tense, however, there is no gender agreement, only number and person agreement.

(15)	ba	ch-u-s	skuul	gas-aan
	I(N,m,sg)	prs-m,1sg	school	go-NPerf

I go to school.

The clause is negated by suffixing the negative marker *-na* to the finite verb. The negative marker always follows agreement affixes (and pronominal clitics, if any), as shown in (16a). Suffixing the question marker *-aa* following the negative marker will yield a yes/no question, as shown in (16b).

(16a)	tse	von-u-th-na	timan	kihiin
	you(E)	told-(2m,sg)-CL-Neg	them(D)	nothing

You did not tell them anything.

(16b)	tse	von-u-th-n-aa	timan	kihiin
	you(E)	told-(2m,sg)-CL-Neg-Q	them(D)	nothing

Did you not tell them anything?

Although the negative element *-na* always appears affixed to the finite verb, it appears immediately before the verb in nonfinite clauses, as shown by the contrast in (17).[10]

(17a)	me	chu	[temsund	batI	na	khyon	]	kharaan
	I(D)	prs	her(G)	food	not	eat-Inf	]	hate

I hate her not eating food.

(17b)	*me	chu	[temsund	na	batI	khyon	]	kharaan
	I(D)	prs	her(G)	not	food	eat-Inf	]	hate

I hate her not eating food.

---

[9] The (suppletive) agreement (gender/number) paradigm of a finite main verb like *karun* 'to do' is (a) kar 'do', (b) kor 'done' (m,sg), (c) kər 'done' (f,sg), (d) kər 'done' (m,pl).

[10] The contrast between (15) and (16) with respect to negation suggests that only finite verbs move out of their maximal projection, given the standard assumption that Neg is generated higher in the phrase structure outside VP.

The morphological structure of the finite auxiliary stem *ch-* outlined above is roughly as given in (18a), and exemplified in (18b).

(18a)

Verb Stem/TNS	Gender	Person/Number	Clitic	Neg-marker	Q-marker

(18b) ch-u-s-n-aa
Tns(Prst)-Gender(masc)-Person(1sg)-Neg-Q

Does he not have (it)?

The nonfinite element of the verb is inflected for aspect — nonperfective and perfective. There is only one suffix *-aan* to indicate both the progressive as well as the habitual aspect.

A brief remark on the distribution of pronominal enclitics in Kashmiri is in order. The Kashmiri enclitics link to the lexical Case of their coreferent NP. For example, the dative enclitic requires its coreferent (e.g., direct object, indirect object, or dative subject) to be marked dative. In the data below, we show that the Φ-features of AGR precede the enclitics (CL).

(19a) ba sooz-a-th tsI baD duur
I(N) send-1sg-(2sgCL) you(A) very far

I will send you very far.

(19b) asyi sooz-oo-n su baD duur
we send-1pl-(3sgCL) he(A) very far

We will send him very far.

(19c) asyi hye-moo-na-y tsye soruph
we(N) take-1pl-(3sgCL)-(2sgCL) you(D) snake(A)

meer-yith
kill-CP

We will have you kill the snake.

(19d) tohyi hyek-yiv-oo-n esyi swa
you(N) able-2sg-(1plCL)-(3sgCL) we(D) that

kitaab d-ith
book(A) give-CP

Would you be able to give us that book.

The order of the enclitics in (19) can be determined by linking them to the hierarchical theta roles of the verb (cf. Wali & Koul 1992). Assuming Suner's (1988) Matching Principle, an account of clitics in Kashmiri can be analyzed by hypothesizing that AGR attracts all the clitics and structures them according to their thematic hierarchy.[11]

Finally, a note on ergativity in Kashmiri. Kashmiri, like other Indo-Aryan languages, is morphologically ergative. Furthermore, it is a split ergative language: in non-perfective transitive clauses a Nominative-Accusative pattern is obtained, whereas in perfective transitive clauses an Ergative-Absolutive pattern is obtained. The relevant data that demonstrates the ergative pattern is discussed in the next section, especially the data in (29), (30) and (31).

2.3.2 Syntax

In this section, a discussion of different Case arrays available in Kashmiri is presented in order to situate the discussion of chapter 6 in a clearer perspective. To begin, the subject can be realized with at least three different types of Case markings at S-Structure. Among the objects, the direct object can be realized with two different types of Case markings depending on certain contexts, while the indirect object is always marked with the dative Case. Both nominative and accusative are not overtly realized by a Case suffix. However, they can be distinguished since the NP with nominative Case always triggers verb agreement, whereas the other nonagreeing phonologically null instance

---

[11] There still remains the problem raised by the data like (i): The accusative object NP in the nonperfective shares its enclitic with the ergative NP. We merely note these data here but do not offer an account of them.

(ia) tse pok-u-th
you(E) walk-AGR-(2sgE)
You walked.

(ib) bi chus-ath tsi behnaav-aan
I aux-(1msg)-2sg you(A) seat-NPerf
I am seating you.

of Case is accusative. The different Case arrays illustrated in (20) below exhaust the possibilities in transitive and intransitive clauses.

(20)
NOM — Vfinite
NOM — Vfinite — ACC
NOM — Vfinite — DAT
NOM — Vfinite — DAT — ACC
ERG — Vfinite — NOM
ERG — Vfinite — DAT
ERG — Vfinite — DAT — ACC
DAT — Vfinite — NOM
DAT — Vnonfinite — Vfinite

The subject of finite clauses can be realized as nominative (Ø), ergative (*-an*), or dative (*-as*, which has two other allomorphs, *-is* and *-i*). Among the objects, the direct object may be marked nominative or accusative (Ø) or dative (*-as/-is/-i*). The dative marking on direct objects in Kashmiri is triggered by the semantic condition of specificity. The indirect objects are always goal arguments and are always marked with dative Case. We present the relevant data in (21) - (29).

In (21a) below, we give an example of an nonperfective intransitive clause, in (21b) a perfective intransitive clause, and in (21c) a future intransitive clause. In each case, the subject is associated with the (phonologically null) nominative Case.

(21a)

laRk	ch-u	dohay	skuul	gatsh-aan
boy(N)	aux-prs(m,sg)	daily	school	go-NPerf

The boy goes to school everyday.

(21b)

laRk	ga-v	skuul
boy(N)	went(m,sg)	school

The boy went to school.

(21c)

laRk	gas-yi	skuul
boy(N)	go-Fut(3,sg)	school

The boy will go to school.

In (22) below, some examples of transitive clauses are presented. Notice that in each case (22a-c), the subject is realized as nominative and the object as accusative.

(22a)	kuur	ch-a	tsuuNTh	khyv-aan
	girl(N)	aux-prs(f,sg)	apple(A,m)	eat-NPerf

The girl eats an apple.

(22b)	laRk	oos	tsuuNTh	khyv-aan
	boy(N)	aux-pst(m,sg)	apple(A,m)	eat-NPerf

The boy was eating an apple.

(22c)	laRk	khe-yi	tsocyi
	boy(N)	eat-Fut(3,sg)	breads(A,f)

The boy will eat breads.

Next we turn to those transitive clauses where the object is marked with the dative Case. In Kashmiri, the dative Case on the object is only optionally realized. However, there is a verb *laayun* 'beat, hit', which subcategorizes for an internal argument that is always realized with the dative Case. Also, the internal argument of this predicate must always be [+human] and very marginally [+animate], which makes this verb different from the English verbs *beat* or *hit* in the following respects: both English verbs can take objects that are [+ animate] as shown in (23) and (24). The data in (23a-d) show that the verb *beat* subcategorizes for an object that may or may not be [+animate]. As (23e) indicates, the object could even be a name of a basketball team. The Kashmiri verb *laayun* cannot be used in any of the interpretations given in (23), except in the sense of (23a) where the direct object is [+human].

(23a) They are beating that poor man.

(23b) They beat the daylights out of him.

(23c) Some Muslims beat their chest on the day of Moharrum.

(23d) They are beating the drums very loudly.

(23e) The Bulls like to beat the Lakers whenever the two teams meet.

The verb *laayun* can be used in the sense of *hit* as long as the object of hitting is [+human] as in (24a). The various other uses of the verb *hit* as shown in (24b-d) are simply unavailable with the verb *laayun*.

(24a) He hit John.

(24b) He hit the door with his head.

(24c) He hit the road.

(24d) They hit a dead end.

The data in (25) below show the Nom-V-Dat Case array with the verb *laayun* where dative Case assignment is essential. The assignment of structural accusative yields ungrammatical sentences as shown in (25a') and (25b').

(25a)	laRk	ch-u	koor-yi	laay-aan
	boy(N)	aux(m,sg)	girl(D)	beat-NPerf

The boy beats the girl.

(25a')	*laRk	ch-u	kuur	laay-aan
	boy(N)	aux(m,sg)	girl(A)	beat-NPerf

The boy beats the girl.

(25b)	maasTar	laa-yi	laRk-as
	teacher(N)	beat-Fut(3,sg)	boy(D)

The teacher will beat the boy.

(25b')	*maasTar	laa-yi	laRk
	teacher(N)	beat-Fut(3,sg)	boy(A)

The teacher will beat the boy.

The data in (25) contrasts with other verbs where the assignment of lexical dative is optional. It has been claimed that in some languages, including Indo-Aryan languages, the dative Case on direct object is triggered by semantic condition of animacy and definiteness (Kachru 1966, Moravcsik 1978, Saksena 1981, Wierzbicka 1981, Khan 1989, Gair & Wali 1989). This generalization does not hold for Kashmiri. As (26) shows, neither of the semantic properties of animacy and definiteness condition the occurrence of dative Case on Kashmiri direct objects. In (26a), an inanimate object appears with the dative Case, whereas in (26b), the dative Case appears with the indefinite article *akh* 'a, an'.

(26a) yath kurs-yi lam
this(D) chair(D) pull

Pull this chair!

(26b) laRk chu dohay eky-is koor-yi
boy(N) aux-prs(m,sg) daily one(D) girl(D)

vuchaan
see-NPerf

The boy sees a girl everyday.

In both of the examples above, the dative Case-marked direct object is always interpreted as specific, as opposed to generic. I claim that it is the specificity property of the NPs that conditions dative Casemarking. Thus, the correct interpretation of (26a) and (26b) is the one given in (26a') and (26b') below.

(26a') yath kurs-yi lam
this(D) chair(D) pull

Pull this (one over here) chair!

(26b') laRk chu dohay eky-is koor-yi
boy(N) aux-prs(m,sg) daily one(D) girl(D)

vuchaan
see-NPerf

The boy sees some one particular (=same) girl everyday (not just any one girl).

The generalization that specificity is indeed responsible for the overt realization of dative Case on direct objects is further supported by the contrast shown in the data in (27).

(27a) laRk vuch-yi az kuur
boy(N) see-Fut(3,sg) today girl(A)

The boy will see (some) girl today.
*The boy will see the girl today.

(27b)

laRk	vuch-yi	az	koory-i
boy(N)	see-Fut(3,sg)	today	girl(D)

The boy will see the girl today
*The boy will see (some) girl today.

Next, we turn to double object constructions in Kashmiri. The order of the primary grammatical functions (i.e., subject and objects) in these constructions is the following: subject—indirect object—direct object. The indirect object is always realized as dative, the direct object is realized as accusative or nominative depending on the aspect (perfective vs. nonperfective), and the subject is realized as either nominative or ergative. In (28a), a nominative-accusative construction, the subject appears in the nominative, the indirect object in the dative, and the direct object in the accusative. In (28b), an ergative-absolutive construction, we find the subject in the ergative and the direct object in the nominative.

(28a)

maasTar	ch-u	laRk-as	kitaab
teacher(N,m,sg)	aux(m,sg)	boy(D)	book(A,f,sg)

div-aan
give-NPerf

The teacher gives a book to the boy.

(28b)

maasTar-an	dits	laRkas	kitaab
teacher(E,m,sg)	gave(f,sg)	boy(D)	book(N,f,sg)

The teacher gave the book to the boy.

It is perhaps useful to mention at this point that Kashmiri does not permit dative Case on both objects in a double object construction as in Icelandic and other such languages. Thus, (29a) is grammatical in Icelandic, but the corresponding sentence in Kashmiri (29b) is ungrammatical.

(29a) <u>Icelandic</u>

Egill	skila i	stelpunni	pennanum
Egill(N)	returned	the-girl(D)	the-pen(D)

Egill returned the pen to the girl.

(29b) Kashmiri

*Egill	chu	kor-yi	kalam-as	vapas
Egill(N)	prs	girl(D)	pen(D)	back

div-aan
give-NPerf

Egill returned the pen to the girl.

Turning now to transitive (single object) perfective clauses, the following Case arrays obtain: ERG—V—NOM (30) and ERG—V—DAT (31).[12]

(30a)

laRk-an	khy-av	batI
boy(E)	ate(m,sg)	food(N,m,sg)

The boy ate the food.

(30b)

kory-av	ch-u	batI	khyo-mut
girls(E)	aux(m,sg)	food(N,m,sg)	eat-Perf(m,sg)

The girls have eaten the food.

(31)

laRk-an	vuch-na	tem-is
boy(E)	saw(3,m,sg)-Neg	him(D)

The boy did not see him.

And finally, to complete the picture, data from the dative subject constructions (32) is presented. The subject of such constructions is marked dative while the theme NP, if present, is marked nominative (32b).

(32a)

tem-is	ch-u	gar	gatsh-un
he(D)	aux(3,m,sg)	home	go-Inf

He has to go home.

---

[12] There are some intransitive predicates in Kashmiri which in perfective clauses require the subject to appear in ergative Case, as shown in (i) below:

(ia) laRk-an vod
boy(E) cried
The boy cried.

(ib) laRk-an os
boy(E) laughed
The boy laughed.

(32b) tem-is pe-yi baakh
he(D) fell(f,sg) cry(N,f,sg)

He began to cry.

2.4 SUMMARY

In this chapter a descriptive overview of Kashmiri was presented. After presenting a demographic distribution of the language and its speakers, an attempt was made to describe the history of the language, especially in view of the fact that Kashmiri is undergoing a diachronic change from SOV to SVO. Finally, some relevant details of Kashmiri grammar — phonology, morphology, syntax— were presented because the scholarly linguistic work in these areas is rather sparse. Further, I believe that the grammatical description in this chapter will facilitate the understanding of the discussion of Kashmiri data in the subsequent chapters.

CHAPTER 3
CONFIGURATIONALITY AND PHRASE STRUCTURE

3.0 INTRODUCTION

This chapter presents a variety of theoretical and empirical arguments to claim that in spite of the apparent freedom of word order, the syntactic structure of Kashmiri is not nonconfigurational as previously analyzed by Raina (1991). The implicit argument is that the freedom of word order is not necessarily synonymous with nonconfigurationality. The result of this investigation is significant in that it provides support for Speas' (1990) claim that, universally, all languages project their arguments configurationally. Specifically, it is suggested that (1) below is the structure of the Kashmiri clause.

(1)

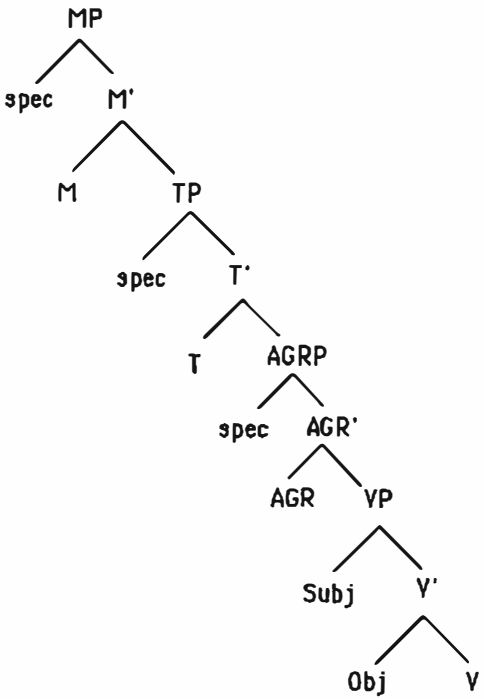

The phrase structure in (1) makes the specific predictions that Kashmiri has a configurational structure where the subject asymmetrically c-commands the VP. Recently, however, Raina (1991) has claimed that Kashmiri is a nonconfigurational language: the subject and the object mutually c-command each other. She proposes (2) as the underlying structure of a Kashmiri clause: the VP projection dominates a series of inflectional phrases which host grammatical relations in an unordered way.

(2)

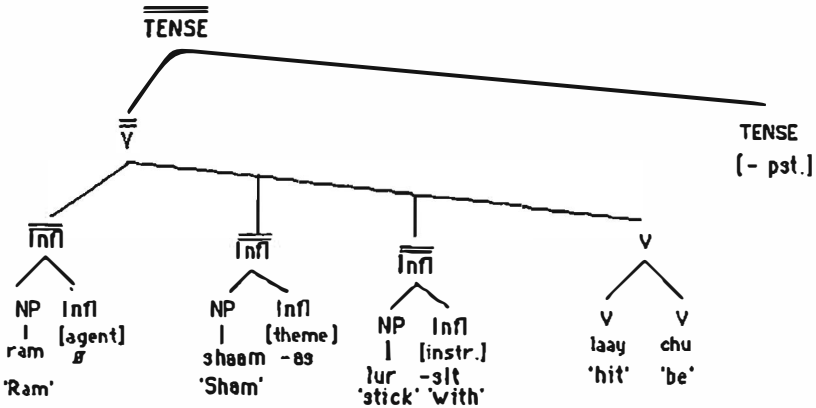

Ram hits Sham with a stick.

In this chapter, then, I begin by defending the thesis that Kashmiri has the configurational syntactic structure shown in (1). This is followed by arguments to claim that, underlyingly, Kashmiri is a verb-final (S-O-V) language.[1] Next, the phrase structure order of Kashmiri is explored, and evidence is presented to establish that in Kashmiri all lexical projections (NP, VP, AP, PP)[2] are underlyingly head-final,

[1] There have been considerable differences among linguists regarding the constituent order of main and subordinate clauses of Kashmiri. Grierson (1919), Kachru (1969), Masica (1976), and Syeed (1984) have suggested S-V-O, whereas Hook (1984), based on the functional theory of "communicative dynamism", and Subbarao (1984), based on Gapping facts, contend that underlyingly Kashmiri is S-O-V.

[2] I assume the category P to be lexical (for an extended discussion on the categorial status of P, see Grimshaw 1991).

whereas all the functional projections above VP (AGRP, TP, and MP) are head-initial. The specific motivation for assuming functional heads above VP is detailed in chapters 4-6.

The VP-internal head-final character of Kashmiri raises an apparent problem for the distribution of the finite complement *ki*-clauses which always appear to the right of the matrix clause. An account of this apparent problem is presented at the end of this chapter.

3.1 KASHMIRI IS NOT "NON-CONFIGURATIONAL"

Before discussing the specific details of Raina's (1991) suggestion concerning the phrase structure of Kashmiri (2), a brief overview of the so called "configurationality parameter" is in order. Ever since Chomsky (1981) and Hale (1982, 1983), it has become necessary to acknowledge the existence of the typological distinction between configurational and nonconfigurational languages.[3] In configurational languages (e.g., English) subjects and objects are uncontroversially nonsisters; i.e., the subject is hierarchically higher than the other complements of the verb. However, in non-configurational languages (e.g., Walpiri) the clause structure is constrained neither by the familiar X'-theoretic principles (Chomsky 1981, Jackendoff 1977) nor by any structural conditions on predication (Williams 1980). The phrase structure rule responsible for generating nonconfigurational languages is given in (3) below (cf. Hale 1982, 1983).

(3) X'---> W* X W

The phrase structure rule (3) makes the specific prediction that languages with such structures do not have strings of words hierarchically arranged, as is the case in English. As a consequence of (3), nonconfigurational languages presumably do not show any subject-object asymmetry. In Hale's (1983) proposal, subjects and objects are represented and structurally distinguished in LS (Lexical Structure), but not (necessarily) in PS (Phrase Structure). LS and PS are then related by linking rules and rules of construal. The difference between configurational and nonconfigurational grammars, schematized in (4) below (from Speas 1990:144), reduces to the level at which the

[3] Speas (1990) summarizes the debate over the "configurationality" issue and argues that languages hitherto considered nonconfigurational, such as Walpiri, Malayalam, and Japanese are indeed configurational. The two languages that are argued to be nonconfigurational in recent literature are Mohawk (Baker 1991) and Kashmiri (Raina 1991). I will argue in this chapter that Kashmiri is a configurational language which assigns constituency to the verb and its complements, resulting in a hierarchically organized sentence structure.

Projection Principle holds. In configurational languages, the Projection Principle holds of both LS and PS, both of which are hierarchically structured, whereas in nonconfigurational languages the Projection Principle does not hold of PS; PS need not be hierarchically organized.

(4)

Configurational Grammar:

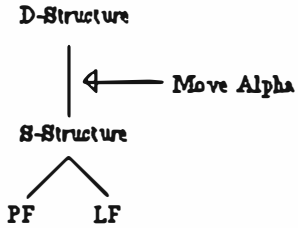

Nonconfigurational Grammar:

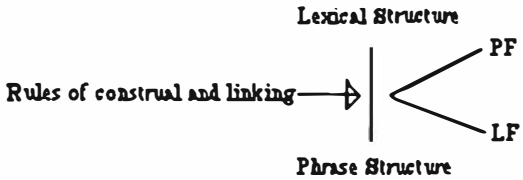

The proposal that the Projection Principle does not hold of PS yields what Hale (1983) refers to as "diagnostics of nonconfigurationality." We list below the diagnostics (5a-f) most commonly associated with languages that have been considered nonconfigurational (cf., Hale 1982, 1983, Farmer 1984, Mohanan 1983, Jelinek 1984, Webelhuth 1984, Speas 1990) and explore the syntax of Kashmiri to see if they are manifest in this language.[4]

(5a) free word order

[4] Raina, however, does not address these diagnostics but, as I will show in this subsection, Kashmiri does bear a superficial similarity to nonconfigurational languages in terms of these diagnostics. I will, however, discuss the diagnostics within the framework (Chomsky 1981) assumed in these studies.

(5b) ability to *pro* drop
(5c) no overt expletives
(5d) rich Case system
(5e) presence of discontinuous constituents
(5f) no NP-movement

At first glance, it seems rather difficult to determine whether Kashmiri is configurational or not since on the surface Kashmiri displays some of the criteria in (5), but lacks other. One of the properties commonly associated with nonconfigurational structures is freedom of word order. This freedom is predicted in Hale's proposal since word order is a property of PS and therefore, crucially, independent of the projection of argument structure. In these free word order languages, there is apparently no compelling evidence to posit an underlying order and then some scrambling operations to give different word order permutations. Different word orders can, therefore, be simply base-generated without complicating the grammar.

Kashmiri allows considerable freedom of word order, with the exception of the Aux-Second constraint. A sentence like (6), for example, can perhaps be written/spoken in as many as six different ways (given appropriate contexts) as long as the verb occupies the clause-second position.[5]

(6a) raath khyav tem batI
yesterday ate he(E) food(N)

He ate food yesterday.

(6b) raath khyav batI tem
yesterday ate food he

(6c) tem khyav raath batI
he ate yesterday food

(6d) tem khyav batI raath
he ate food yesterday

[5] In the next chapter (section 4.1, passim) I argue that the fronted constituent usually gets the focus interpretation, so that (6a) would normally have the following semantic interpretation: "It was yesterday that he ate food." More on this in the next chapter. Also, whenever some constituent intervenes between post-verbal subject and the finite verb, that intervening constituent gets a mild focal stress, indicating a dislocated constituent. Thus in (6b) and (6f), *batI* and *raath*, respectively, receive focal stress.

(6e) batI khyav tem raath
food ate he yesterday

(6f) batI khyav raath tem
food ate yesterday he

Since the Projection Principle does not hold of PS in nonconfigurational languages, the PS component in these languages may frequently lack arguments of the predicate because nothing **requires** them to be present, which is manifested as *pro-drop*. Kashmiri allows both subjects and objects to *pro-drop* (7). In both (7a) and (7b), the arguments (subject and object) of the verb are missing, pointing to the nonconfigurational structure of Kashmiri.

(7a) raath vuch-n-ay
yesterday saw-3sg-2sg

He saw you yesterday.

(7b) naav prutsh-th-as-aa
name asked-2sg-3sg-Q

Did you ask his/her name?

Webelhuth (1984) suggests that languages without overt expletives may, though not necessarily, have nonconfigurational structure. This suggestion is based on the assumption that expletives are required to satisfy the predication requirement, which belongs to the LS, not the PS, component. Like other Indic languages, Kashmiri does not have overt nonreferential expletives (8a) and (8b), as is the case in English, e.g., *It is raining* or *There is a snake in the toilet*. The demonstrative pronoun *yi* 'this' is used pleonastically sometimes in extraposed clauses as in (8c).

(8a) *yi chu ruud pyav-aan
this is rain falling

It is raining.

(8b) *tetyi chu soruph Techyi-manz
there is snake toilet-in

There is a snake in the toilet.

(8c) yi kor-na tem-is khosh ki ba byuuThus-na
this did-Neg her(D) happy that I sat-Neg

It upset her that I did not sit.

Nonconfigurational languages are likely to have a rich Case system which is required to link PS to LS. Kashmiri can also be counted as a language which has a fairly rich Case system. It makes use of nominative (agreeing, nonovert morphological Case), accusative (nonagreeing, nonovert morphological Case), dative, ergative, ablative, and instrumental.

There are, however, some properties that Kashmiri does not share with other non-configurational languages. For example, Kashmiri does not allow discontinuous expressions in the sense of Walpiri. Discontinuous expressions are predicted to appear in nonconfigurational languages due to the absence in PS of the Projection Principle, which guarantees the one-to-one correspondence between phrases and arguments. Consider (9), an example of the discontinuous expression ('the bellicose man') in Walpiri (data taken from Mohanan 1983).

(9) **ngarrka -o** ka wirupirli -mi **kulu-parnta**
man abs aux whistle nonpast bellicose-abs

karli -o jarnti -minja -karra
boomerang-abs trim -inf -comp

The bellicose man is whistling while trimming a boomerang.

Although Kashmiri appears to permit discontinuous constituents, their use, however, is very restricted: only genitive NPs and PPs are allowed to be discontinuous, as the data in (10) show. (10a) shows that the NP and the governing preposition can be separated. (10b) is an example of a discontinuous genitive construction: the genitive and the governing noun are separated. However, the ungrammaticality of (10c) and (10d) indicates that Kashmiri does not permit discontinuous NPs as freely as in non-configurational languages like Walpiri, Jingulu, Jiwalri, etc.

(10a) bhoganas thov me pyaTh ThaanI
pan(O) put I(E) on lid(N)

I put the lid on the pan.

(10b)	tem-sund	chu	asyi	makaan	baDI	pasand
	he-of	aux	us(D)	house(N)	very	like

We like his house very much.

(10c)	*gariib	dits	me	laRkas	haar
	poor(D)	gave	I(E)	boy(D)	money(N)

I gave money to the poor boy.

(10d)	*su	dyut	shiilaayi	me	kalam
	that(N)	gave	Sheila(E)	I(D)	pen(N)

Sheila gave me that pen.

Another property that Kashmiri does not share with other non-configurational languages is that it allows NP movement, as shown in the passive construction in (11) below. In (11a) and (11b), only the c-commanding subjects *laRkan* and *me*, not the objects, control the reflexive and PRO. In (11c) and (11d), on the other hand, it is shown that the passive subject is now able to control the reflexive and PRO; in other words, the passive subjects must have moved to a position from which they are able to c-command (and control) the reflexive and PRO.

(11a)	raath	looy	maastar-an$_i$	paninyi$_{i/*j}$	fuT-as
	yesterday	hit	teacher(E)	self's	ruler-of

siithyi	laRk-as$_j$
with	boy(D)

Yesterday the teacher$_i$ hit the boy$_j$ with his$_{i/*j}$ ruler.

(11b)	raath	looy	me$_i$	tem-is$_j$	[PRO$_{i/*j}$	gar
	yesterday	hit	I(E)	him(D)		home

vaatith]
reached

Yesterday I hit him when I reached home.

(11c) raath aav laRk-as$_i$ paninyi$_i$
yesterday came boy(D) self's

ſuT-as siithyi laay-nI
ruler-of with hit-Pass

The boy$_i$ (student) was hit (by someone) yesterday with his$_i$ ruler.

(11d) raath aav tem-is$_i$ [PRO$_i$ gar vaatith]
esterday came he(E) home reached

laay-nI
hit-Pass

Yesterday he was hit when he reached home.

To sum up, of the six properties that are presumably associated with non-configurational languages, Kashmiri shows clear evidence of four of them. In addition, there is also evidence, albeit little, of discontinuous constituents in Kashmiri. The NP movement property that Kashmiri displays is perhaps the only clear evidence of its configurationality. This may lead one to believe that Kashmiri is a nonconfigurational language. In the remainder of this section, then, I will argue that this is indeed not the case. I will present the arguments for nonconfigurationality that Raina (1991) offers and show that they do not hold when the facts are carefully scrutinized.

Raina proposes a nonconfigurational syntactic representation for Kashmiri based on the claims (i) that there are no asymmetries between the subject and the other arguments of the verb and (ii) that there are no asymmetries between the verb's direct object and the postpositional (indirect) object. Basically, Raina claims that Kashmiri does not have a VP constituent, and therefore no c-commanding asymmetries hold between arguments of the verb. She uses verbal agreement, the reflexive-antecedent relationship, and the distribution of PRO to show that the notion of subject is not motivated in the grammar of Kashmiri. In the following subsections, I will present empirical and theoretical arguments to demonstrate the inadequacies of her account.

3.1.1 Agreement

Raina (1991:29) claims that in Kashmiri the "verb agrees with any NP without an overt inflection". This is, however, an incorrect generalization as the Kashmiri data in (12) show — the verb always

agrees with the subject if both the subject NP and the object NP are without an overt inflection.

(12a)	tsI	ch-u-k	yim	kitaabI
	you(N)	aux-(m,2,sg)	these	book(A,f,pl)

par-aan
read-NPerf

You are reading these books.

(12b)	ba	ch-a-s	yi	Thuul
	I(N,f,sg)	aux-(f,1,sg)	this	egg(A,m,sg)

khyv-aan
eat-NPerf

I am eating this egg.

In both (12a) and (12b), the subjects as well as the objects are not overtly Case-marked. The nominative NP in Kashmiri is never overtly Case-marked, and the stem always appears in what is called the direct (uninflected) form. The direct object, on the other hand, whenever overtly Case-marked, changes the shape of the stem to what is known as the oblique form. In the examples above, both the subject and the object are in the direct form, yet the verb agrees with the subject, and not with the object. Besides, verbal agreement cannot be used to motivate the notion of subject in Kashmiri because Kashmiri, like other Indic languages, displays a split-ergative system — the verb agrees with the subject in nonperfective clauses and with the object in unaccusative clauses (i.e., ergative and psych constructions). Later in Chapter 6, I will argue that agreement in Kashmiri is a reflex of morphological (nominative) Case assignment under Spec-Head agreement in the AGR projection.

In the next subsection, I turn to her other argument, reflexive antecedent relationship. A detailed discussion of the relevant binding-theoretic facts of Kashmiri will show that there is indeed a need to posit a hierarchical structure in which the subject must asymmetrically c-command the verb and its complement.

3.1.2 Binding Theory

Raina claims, among other things, that the reflexive does not always choose the subject as its antecedent, and therefore nothing crucial

hinges on the notion of subject in Kashmiri grammar. The claim, however, is falsified by the the fact that there are several restrictions on the appearance of anaphors in Kashmiri. In fact, the binding-theoretic data I present will confirm the existence of a configurational structure in Kashmiri.

In the framework assumed here (Chomsky 1981), Principle A of the Binding Theory (BT-A) states that anaphors have to be bound in their governing category; i.e., there is a c-commanding antecedent in that domain binding the anaphors. This principle makes different predictions for configurational vs. nonconfigurational languages with respect to the distribution of subject and object anaphors. Under a nonconfigurational analysis, the contrast in (13) and (14) is unexpected because both the subject and object will be able to c-command each other, and therefore the anaphor will be bound in its governing category (=IP), yielding no contrast whatsoever in either (13a, 14a) or (13b, 14b) since there is no violation of BT-A. Further, the contrast in (13b) and (13c) indicates that precedence does not make a difference.

(13a) tim$_i$ chi-na akh ekyi-sinz$_i$ kath boozaan
they aux-not each other-of story listen

They$_i$ do not listen to each other's$_i$ story.

(13b) akh ekyi-sinz$_i$ kath chi-na tim$_i$ boozaan
each other-of story aux-not they listen

They$_i$ do not listen to each other's$_i$ story.

(13c) *akh ekyis$_i$ chi-na tihanz$_i$ kath boozaan
each other aux-not them-of story listen

Each other$_i$ do not listen to their$_i$ story.

(14a) timav$_i$ kor paanvInyi$_i$ khaandar
they did each other marriage

They married each other.

(14b) *paanvInyi$_i$ kor timan$_i$ khaandar
each other did them marriage

Each$_i$ other married them$_i$.

If a configurational structure is assumed, however, then the contrast in (13) and (14) follows straightforwardly, given that in such structures the subject asymmetrically c-commands the object. The grammaticality of (13b) follows straightforwardly. In (13b), the object is fronted to an A' position from which it can be reconstructed to its base position at LF yielding the configuration in which the subject asymmetrically c-commands the object. In (13c) the antecedent in the object position *tihanz* is unable to A-bind the *akh ekyis* in the subject position yielding the ungrammaticality of the sentence. Thus, (13c) shows that even with reconstruction, the subject and object are not symmetrical; if they were, then (13c) and (13b) should have been the same. A similar explanation holds for the contrast in (14).

Another piece of evidence for the hierarchical structure of Kashmiri comes from the binding facts of reflexive possessives like *panun*. In Kashmiri any NP can be an antecedent for *panun* (as Raina maintains) as long as it is not itself a proper part of an NP or a PP (see Hook and Koul 1992). Thus, while (15a) is ambiguous, both *ba* and *su* acting as possible antecedents for *panun*, (15b) is disambiguated by moving the phrase (scrambling, A-movement) containing the reflexive possessive over the direct object *su*. In so doing, the direct object *su* no longer c-commands (and therefore A-binds) the anaphor, which, of course, explains the impossibility of the second interpretation in (15b).

(15a) ba_i nyiman su_j $panun_{i/j}$ gar kaaryi manz
I take-Fut he self's house car in

I will take him to my/his house in the car.

(15b) ba_i nyiman $[panun_{i/*j}$ $gar]_k$ su_j t_k
I take-Fut self's house he

kaaryi manz
car in

I will take him to my/*his house in the car.

Now it can be conjectured that the contrasts in (15) follow from the hypothesis that binders must precede their bindees. This "precedence effect" hypothesis must be rejected, however, for it cannot account for the reflexive data such as in (16). In (16), the ergative subject both precedes and also c-commands the reflexive. However, the genitive nominal precedes it but does not c-command the reflexive. Now, if precedence had any role in anaphor binding in Kashmiri, the genitive *ramesh-sinz* should have been able to bind the reflexive, but as can be

inferred from (16), that is not the case. This shows that it is c-command, and not precedence, that is relevant to reflexive binding in Kashmiri.

(16) tem$_i$ kor ramesh$_j$-sinz paarTiiyas-manz
he(E) did Ramesh-of party-in

panun$_{i/*j}$ booy badnaam
self's brother insult

He$_i$ insulted his$_{i/*j}$ brother in Ramesh's$_j$ party.

And finally, I present some evidence for configurationality from data on Binding Theory C. If Kashmiri were indeed nonconfigurational, then given the indexation, the grammaticality of (17) is unexpected [data from Raina 1991:128; Ex 103].

(17) raam-sinz$_i$ maaj chi temis$_i$ tshaanDaan
Ram(G) mother aux him look for

Ram's mother is looking for him.

Under Raina's nonconfigurational account, (17) should be ungrammatical as a violation of BT-C because an R-expression is bound by the c-commanding pronoun. However, if a configurational structure for Kashmiri is assumed, then the grammaticality of (17) is expected. The subject *Ram's mother* is higher in the structure than the coindexed pronominal *him* — the latter does not c-command the former, rendering the R-expression free and thereby accounting for the grammaticality of (17).

Raina also claims that Kashmiri does not exhibit any asymmetries between the direct object and the postpositional (indirect) object. This, however, is not a correct generalization about Kashmiri grammar, for we do find some evidence to the contrary. Consider, for example, the data in (18). (18a) shows the unmarked nominative-dative-accusative order in active declarative main clauses in Kashmiri, whereas in (18b) the order dative object — accusative object is reversed.

(18a) thaanedaar$_i$ chu panin$_{i/*j}$ maajyi su shur$_j$
policeman(N) aux self's mother(D) that child(A)

divaan
gives

The policeman gives his mother that child.
*The policeman gives the (child's) mother that child.

(18b) thaanedaar$_i$ chu su shur$_j$ panin$_{i/j}$ maajyi
policeman aux that child self's mother(A)

divaan
gives

The policeman gives his mother that child.
The policeman gives the (child's) mother that child.

If, with Raina we assume that the objects within VP are sisters to each other and, therefore, mutually c-command each other, then the unambiguous reading in (18a) is unexpected. When the direct object precedes the indirect object (by A-scrambling the direct object), then it is able to bind the reflexive in the indirect object. Recall that we have already ruled out the hypothesis that in Kashmiri binders must precede their bindees. It, therefore, must be the case that the indirect object, in the unmarked order, is in a position hierarchically superior to the direct object. Consequently, the direct object in (18a) is unable to c-command and, therefore, bind the reflexive inside the indirect object. I will therefore assume that goal arguments, i.e., indirect objects, are projected higher than theme arguments, i.e., direct objects.

3.1.3 Distribution of PRO

Raina merely observes that in some languages like Kashmiri, Hindi, and Oriya, etc., PRO can only be an agentive and an experiencer subject but not an instrumental subject, which she takes as evidence to claim that "positing subject cannot be taken to be conclusive" (1991:34). Even though Raina does not provide any data to support her claim, there is evidence contrary to her claim. The data in (19) show that in Kashmiri both the Controllee, in the nonfinite clause, and the Controller, in the finite matrix clause, are always the subjects. If we assume with Raina that the notion of subject is not motivated in the grammar of Kashmiri (1991: 27-34), an important generalization about the Control constructions in Kashmiri will be lost, namely, that only

subjects can be PRO. Further, as the second (ungrammatical) reading suggests, only subjects, not objects, can control PRO.

(19) [PRO$_{i/*j}$ batI khya-th] vach laRk-an$_i$ kuur$_j$
food eat-CP saw boy(E) girl(N)

After the boy finished eating the food, he saw the girl.
*After the girl finished eating the food, the boy saw her.

3.1.4 Additional Evidence

Additional evidence against Raina's nonconfigurational analysis (2) of Kashmiri phrase structure and in favor of our configurational structure (1) can be derived by the we l-known phenomena of Weak Crossover (WCO), Constituent Fronting (CF), and the Superiority-like Effect. I will show, based on evidence of WCO effects and CF, that subjects in Kashmiri asymmetrically c-command the object. In addition, I also provide data to show that Kashmiri does indeed exhibit adjunct-argument asymmetries, which in a flat structure like (2) is unexpected.

3.1.4.1 Weak Crossover (WCO)

Another argument for configurationality in Kashmiri can be developed based on the facts of weak crossover (WCO). WCO is a property of only those languages in which the subject c-commands the object, but the object does not c-command the subject. The contrast in *wh*-extraction facts in (20) receives a natural account if the subject is assumed to c-command objects and not vice-versa.

(20a) Who$_i$ t$_i$ loves his$_i$ mother?
(20b) *Who$_i$ does his$_i$ mother love t$_i$?

In (20a), the trace of the moved *wh*-phrase is locally A'-bound, and the possessive is locally A-bound by t_i. In (20b) however, the *wh*-trace is not A-bound by the pronoun *his* because it does not c-command the trace t_i. The ungrammaticality of (20b) is a result of the violation of the Bijection Principle [BP] given in (21) below.

(21) The Bijection Principle: (cf., Koopman and Sportiche 1982)
(a) Every variable must be bound by exactly one operator;
(b) Every operator must bind exactly one variable. A variable is defined as a locally A'-bound category and an operator is defined as any XP in Comp.

The ungrammaticality of (20b) is a violation of the second clause of the Bijection Principle (BP): one (*wh*-phrase) operator binds two variables.

The contrast in (20) is not predicted if we assume a nonconfigurational structure for English. Under a nonconfigurational analysis, both (20a) and (20b) should be grammatical and no WCO effects should be noticed since the t_i (in 20b) could c-command and, therefore, bind the pronoun *his* which would then not lead to a BP violation. Thus, in a flat structure like (2), where subject and object mutually c-command each other, contrast such as (20) is unexpected.

A similar subject-object asymmetry also obtains with quantifier phrases. The subject quantifier phrase coindexed with a possessive pronoun yields a well-formed sentence as in (22a), whereas the sentence is ill-formed if the quantifier phrase is in the object position and is coindexed with a possessive pronoun in the subject position, as in (22b).

(22a) Everyone$_i$ loves his$_i$ mother.
(22b) *His$_i$ mother loves everyone$_i$.

The assumption of a configurational structure for English (subject asymmetrically c-commanding object) will yield the contrast shown in (22). The well-formedness of (22a) is explained in the following manner: at LF, *everyone* moves to the operator-position A'-binding its trace, which A-binds the possessive pronoun. (22b) will be ruled out at LF because at that level *everyone* will bind two variables (its own trace and the possessive pronoun) in violation of the BP. Again, if we assume a nonconfigurational structure for (22), such a contrast will not be predicted since at LF the trace of *everyone* could bind *his*, hence, no violation of BP and no WCO effects.

In Kashmiri we do notice WCO effects, as shown in (23).

(23a) raath kemyi$_i$ kor t_i temsinz$_i$ maajyi
yesterday who did his mother

phoon
phone

Who$_i$ called his$_i$ mother yesterday?

(23b) *raath kemyis$_i$ kor temsinz$_i$ maajyi t_i
yesterday whom did his mother

phoon
phone

Who$_i$ did his$_i$ mother call?

The contrast in (23) would be unavailable if Kashmiri were analyzed as having a nonconfigurational structure. Assuming a nonconfigurational analysis, (23a) and (23b) would be equivalent in their c-command relations at LF: the possessive pronoun in each case will be locally A-bound and, hence, would not be a variable. The BP will not be violated since only the trace (variable) is associated with the *wh*-operator. This, of course, would leave the ungrammaticality of (23b) unexplained.

On the other hand, if a configurational structure is assumed for Kashmiri, then the contrast in (23) follows straightforwardly. In (23a) the possessive pronoun *temsinz* is not a variable locally operator-bound; rather, it is A-bound (c-commanded) by the subject trace. In (23b), on the other hand, the possessive pronoun *temsinz* does not have an A-antecedent: it is a variable-bound by the operator *kemyis*.[6] In such a configuration, then, the *wh*-operator binds two variables, *temsinz* and t_i, which results in the ungrammaticality of the sentence as a violation of the BP.

Another subject-object asymmetry is observed with quantifier phrases, as shown by the contrast in (24).

(24a) saaryii$_i$ chi temsendis$_i$ baayis pyaar
everyone aux his brother-to love

karaan
does

Everyone$_i$ loves his$_i$ brother.

(24b) *temsund$_i$ booy chu saaryini$_i$ pyaar karaan
his brother is everyone love does

His$_i$ brother loves everyone$_i$.

---

[6] As I discuss later in chapter 6 (section 6.2), when the object scrambles to the left of the subject position, immediately following the finite verb, it scrambles not to an A-position, but to an A'-position adjoined to TP.

Again, the contrast in (24) cannot be explained by assuming a nonconfigurational structure like (2). Under a nonconfigurational structure, (24a) and (24b) are predicted to be grammatical since in each sentence the trace of LF movement of QP can c-command and, therefore, A-bind the possessive pronoun.

The contrast in (24) can be explained only by assuming a configurational structure where the subject NP asymmetrically c-commands the object NP. In (24a), when *saaryi* moves at LF, the trace it leaves behind A-binds the possessive pronoun *temsendis*. The trace itself is A'-bound by the moved quantifier. In (24b), on the other hand, the LF movement of the quantifier creates another variable (its trace). The moved QP locally A'-binds its trace as well as the possessive pronoun, resulting in a BP violation.

3.1.4.2 Constituent Fronting

Earlier in this chapter we noticed that in Kashmiri, a finite verb in second position can be preceded by any major constituent in sentence-initial position (see (6) above). There are restrictions as to how many constituents can precede the finite verb. It turns out that exactly one, but not more than one, constituent can be fronted.[7] Thus (25), in which two object NPs appear before the finite verb, is ungrammatical.

(25) *laRk-as kitaab dits tem
boy(D) book(N) gave he(E)

He gave a book to the boy.

The constraint that only a single constituent can be fronted makes for a good test for constituency in Kashmiri. In Kashmiri, if two items can occur together (without a pause between them) in the pre-verbal main clause position, then they are elements of a single constituent; if they cannot, then they belong to separate constituents. So, the direct object of a verb can be topicalized with a participle as shown in (26b, 27b), whereas any attempt to do so with the subject and a participle leads to ungrammaticality (26c, 27c), indicating that the subject of the clause does not form a constituent with the verb. Therefore, it can be concluded that the verb and its direct complement (direct object) form a constituent, presumably a VP.

---

[7] The exception to this generalization is found in interrogative clauses wherein the finite verb is immediately preceded by *wh*-words which can be preceded by at most one topic NP.

(26a) su chu dohay panun phoTuu vuchaan
he aux daily self's picture sees

He looks at his picture everyday.

(26b) panun phoTuu vuchaan chu su dohay
self's picture sees aux he daily

He looks at his picture everyday.

(26c) *su vuchaan chu dohay panun phoTuu
he sees aux daily self's picture

He looks at his picture everyday.

(27a) temsund mool oos habkadalas nish
his father aux Haba bridge near

kitaabI kanaan
books sells

His father used to sell books near Haba bridge.

(27b) kitaabI kanaan oos temsund mool
books sells aux his father

habkadalas nish
Haba bridge near

His father used to sell books near Haba bridge.

(27c) *temsund mool kanaan oos habakadalas nish
his father sells aux Haba bridge near

kitaabI
books

His father used to sell books near Haba bridge.

Thus, the data in (26) and (27) clearly show that the verb and the object form a single constituent which explains the grammaticality of (26b, 27b). The ungrammaticality of (26c, 27c), on the other hand, shows that the subject and the participle belong to separate constituents.

3.1.4.3 Superiority-Like Effects

This section reports data on *wh*-movement to show that although argument *wh*-phrases can be stacked indiscriminately before the finite verb in Kashmiri, the adjunct *wh*-phrases need to be closest to the finite verb in multiple question constructions.

In Kashmiri, the *wh*-phrases move immediately to a preverbal (focus) position.[8] In multiple questions, at least one *wh*-phrase must be in the preverbal position; the others may, but do not have to move to this position. If they do move to the preverbal position, they must be adjacent to each other as seen in (28).

(28a) me prutsh laRkas (ki) batI kemyi ron
I asked boy that food who cooked

I asked the boy who cooked the food.

(28b) me prutsh laRkas (ki) kemyi kyaa ron
I asked boy that who what cooked

I asked the boy who cooked what.

(28c) me prutsh laRkas (ki) kyaa kemyi ron
I asked boy that what who cooked

I asked the boy who cooked what.

(28d) me prutsh laRkas (ki) kemyi ron kyaa
I asked boy that who cooked what

I asked the boy who cooked what.

The relative order of *wh*-phrases in (28) seems to suggest that in Kashmiri, it does not matter which *wh*-phrase moves first, the *wh*-phrase which is immediately left-adjacent to the finite verb is the one that moves first. The data in (28b) indicate that the subject position must be properly governed in Kashmiri, for if it was not, then we should have expected (28b) to be ungrammatical on account of the ECP violation. There are other languages, such as Japanese and Chinese, for which it has been argued persuasively that the subject is a properly governed position (cf. Lasnik & Saito 1992:40, and *passim*). Somewhat similar conclusions have been reached for *wh*-movement facts in Hungarian by Brody (1990).

---

[8] I discuss *wh*-movement in detail in chapter 4, section 4.1.2.2.

In multiple questions with adjuncts, however, as in (29) and (30), we do find ECP-type effects. When the adjunct moves first, as in (29), the sentence is grammatical. The grammaticality of (29) follows from the fact that when the adjunct *kyaazi* moves first, it gives its index to the maximal projection that hosts it, thereby enabling it to antecedent-govern its trace. In (30), however, the object *wh*-phrase moves first giving its index to the maximal projection that hosts it. The ungrammaticality of (30) is due to the inability of the adjunct *kyaazi* to assign its index to the maximal projection, thereby failing to properly (antecedent) govern its trace, resulting in an ECP violation.[9]

(29) (me prutshmas) kos kitaab kyaazi/kithpaThyi
I asked which book why/how

par tem
read he

(I asked him) which book he read why/how?

(30) *(me prutshmas) kyaazi/kithpaThyi
I asked why/how

kos kitaab par tem
which book read he

(I asked him) why/how he read which book?

The facts so far suggest that (i) the lack of superiority effects in Kashmiri is not due to lack of subject-object asymmetry (ECP) but, rather, is due to the fact that subject positions in Kashmiri are properly governed positions, and (ii) that superiority-like effects do in fact obtain in multiple questions with adjuncts; the argument-adjunct asymmetry suggests that the clause-structure of Kashmiri cannot follow from the PS tree of the type (2) suggested by Raina (1991).

To sum, the data presented above in sections 3.1.1 through 3.1.3 will not receive an explanation without positing *ad hoc* filters, etc., if a nonconfigurational structure is assumed for Kashmiri along the lines proposed by Raina (1991). I have argued that a nonconfigurational structure of the type in (2) must not be assumed for Kashmiri because it cannot account for all the subject-object asymmetries as well as

[9] I assume that the adjuncts *how* and *why* are not theta governed. Further, the superiority-like effects are maintained even if a D-linked *wh*-phrase like "which book" is replaced by a non-D-linked wh-phrase like "what".

argument-adjunct asymmetries noticed above. These asymmetries can only find an explanation in a configurational structure, which has the subject position asymmetrically c-commanding the object position.

Having established that Kashmiri is configurational, I now turn to Kashmiri phrase structure to determine precedence relations. The next section will establish that lexical categories are head-final and, particularly, that VP is head-final. This is tantamount to saying that underlyingly Kashmiri is an S-O-V language. I will, however, also argue that the functional projections above VP are head-initial.

3.2 WORD ORDER CONSTRAINTS: KASHMIRI PHRASE STRUCTURE

Under the assumptions of some versions of Government and Binding (GB) theory (Chomsky 1981), D-Structure is characterized as having a well-defined underlying linear order of constituents to which Move-α applies to yield a change in the linear order at S-Structure. Languages like Kashmiri that have relatively flexible word order pose a challenge in accurately determining the D-Structure order of heads and their complements. I will claim here that Kashmiri is underlyingly a head-final language. My argument is that the direction in which a lexical head discharges its theta role and assigns Case (=direction of government) will determine the respective order of a head and its complement at D-Structure and at S-Structure. This is consistent with the assumptions of some version of the theory, e.g., Koopman (1984) and Travis (1984).

(31) (i) D-Structure is not merely an X-bar theoretic projection of argument structure to which θ-roles are assigned but that it also include specifications about the direction in which these θ-roles are assigned, and
(ii) the assignment of Case involves a directional parameter.

Given these assumptions, I will describe word order facts in Kashmiri examining both head-complement relations within NPs, PPs, APs and word order relations among constituents at the IP (=S) level. The evidence will show that the head of a lexical projection appears to the right and that the canonical government relation is [___ X]. In other words, I claim that the lexical categories in Kashmiri project in the following way:

(32)

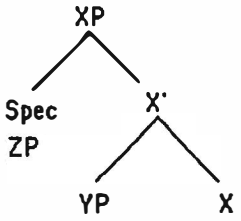

3.2.1 N-complements

Given the constraints of the X' system, it has been claimed that dominance relations are constant, and that languages vary only in terms of precedence relations. In NPs, specifiers, genitives, and complements always precede the head, as shown in (33).

(33a) yi laRk chu myon booy
this boy is my brother

This boy is my brother.

(33b) TuurisTan-hund makaan
tourists(G) house

Tourist's house.

(33c) akh baD thod katsur laRk
one very tall blonde boy

One very tall blonde boy.

These examples (33a-c) can be accounted for if one assumes that NPs are head-final. In (33b) particularly, the genitive adposition *hund* 'of' appears to the left of the head. This observation is stated in terms of the following generalization for Kashmiri:

(34) Heads discharge θ-roles to their left.

The generalization in (34), however, correctly predicts (35a) to be ungrammatical but wrongly predicts (35b) to be grammatical.

(35a) *makaan myoon booy
house my brother

My brother's house.

(35b) *myon booy makaan
my brother house

My brother's house.

The order of the complements and head in (35) follows from (34), yet it is ungrammatical because the noun *booy* 'brother' is in the complement position and is unable to receive Case. A genitive adposition that reflects the θ-role (possessor) associated with its complement is required to assign Case to it (i.e., *booy*). The only two places where the adposition can occur is either to the right or to the left of the complement noun. If it is placed to the left, the phrase is ungrammatical as shown in (36a) and (36b), but if it is placed after the complement noun, the phrase becomes grammatical as shown in (36c).

(36a) *sund myon booy makaan
of my brother house

My brother's house.

(36b) *myanis sund booy makaan
my of brother house

My brother's house.

(36c) myan-is booy sund makaan
my brother of house

My brother's house.

The ungrammaticality of (36a) and (36b) and the grammaticality of (36c) can be blamed on the fact that in (36a) and (36b) the genitive marker *sund* 'of' cannot assign Case to the right, and thus the complement noun remains Caseless and violates the Case Filter. This observation allows us to hypothesize that in Kashmiri,

(37) Case is assigned to the left by a Case assigner.

If hypothesis (37) is correct, then the Case assigning adposition should immediately follow the complement noun in order for Case to be correctly assigned. Sentence (36c) in fact confirms hypothesis (37)

since the Case assigner *sund* occurs to the right of the nominal *booy* bearing the thematic role of Possessor. The sentence is grammatical because at this position *sund* correctly assigns Case to *booy*.

3.2.2 Postpositions

In Kashmiri, the complement-head order inside an adpositional phrase is consonant with the head-final character of Kashmiri. The adposition always occupies the phrase-final position, and the complements always precede their head. The evidence for the head-final character of postpositional phrases in Kashmiri is presented in (38a) and (38a').

(38a)	tem	an	zanaan	maal-is	khaatr
	he(E)	brought	wife	father(O)	for

He brought (his)wife for the (sake of his) father.

(38a')	tem	on	zanaan-i	khaatr	mool
	he(E)	brought	wife(O)	for	father(N)

He brought father for the (sake of his) wife / *He brought the wife for the (sake of his) father.

In (38a) the P *khaatr* 'for' assigns oblique Case to *mool* 'father' which is realized as *maalis* in the oblique case. If the P *khaatr* appears between the two nomimals *zanaan* 'wife' and *mool* 'father' as in (38a'), the meaning changes because the P will now be interpreted (semantically) as associated with the preceding noun to which it assigns the oblique Case (cf. hypothesis (37)). The second reading in (38a') is, therefore, impossible. Also, the verb *on* 'brought' in (38a') agrees with the direct object *mool* (PPs in Kashmiri block agreement) and the verb *an* in (38a) shows agreement with *zanaan*, the direct object.

3.2.3 Adjectives

Adjective projections (AP) also provide evidence for [__X] as the canonical government structure. In Kashmiri APs, too, the complements always precede their heads (cf. 39a, b).

(39a)	huun-is	hyuu
	dog(O)	like

Like a dog.

(39b) kanana-khatr tayaar
sale for ready

Ready for business.

In addition, certain adjectives appear to have the lexical property of taking nonfinite clausal complements, as shown below in (39c). The ungrammaticality of (39c') confirms the head-final character of the adjective projection.

(39c) [PRO ilekshan khabar bozni khaatr] beetaab
election news hear for impatient

luukh
people

People impatient to hear the election news.

(39c') *beetaab [PRO ilekshan khabar bozni khaatr] luukh

3.2.4 The Structure of VP

In this section, I will argue that the structure of the Kashmiri verb phrase (VP) is similar to those of other lexical phrases, i.e., [__X]. The hypotheses in (27) and (31) predict that Kashmiri is head-final within VP given that the assignment of theta roles and Case to the argument NPs is to the left. On the surface, however, hypotheses (27) and (31) do not seem to hold for Kashmiri clauses as the data in (40) below indicate. The word order at the IP (=S) level is the same as the one we find for English, viz., Subject-Verb-Object.

(40a) laRk-an par kitaab
boy(E) read(f,sg) book(N,f,sg)

The boy read the book.

(40b) laRk-an khe-yi tsoT
boy(E) ate(f,sg) bread(N,f,sg)

The boy ate the bread.

(40c) kus gav kamar-as manz
who(N) went room(O) in

Who went in the room?

It is perhaps reasonable to assume at this point that the Kashmiri VP is head initial. However, there seem to be several problems with this assumption.

First, in assuming a head-initial VP, we will have no basis to explain why the S-Aux-V-O order in (41a) is acceptable only if the main verb is pronounced with a marked stress (indicating a dislocated position). This contrasts with (41b) in which the main verb does not need any focal stress. Further, there is no compelling evidence to motivate a movement of the nonfinite verb to the end of the clause as in (41b), especially, given the "economy" guidelines and the "movement as the last resort" principle (Chomsky 1991).

(41a)	ba	chu-s	div-aan	laRk-as	kitaab
	I(N)	aux(m,sg)	give-NPerf	boy(D)	book(A)

I give a book to the boy.

(41b)	ba	chu-s	laRk-as	kitaab	div-aan
	I(N)	aux(m,sg)	boy(D)	book(A)	give-NPerf

I give a book to the boy.

Second, in assuming a head-initial VP, we shall have to assume that within the VP the directionality of theta and Case assignment is opposite of what we find for other lexical heads, an undesirable assumption. There is reason to believe that the verb does indeed assign Case to its left. Consider again the data in (41a). Given that the order of objects in (41a) is unmarked (recall this from section 3.1.4), and assuming that the verb assigns accusative Case to its direct complement under adjacency condition, then the sentence in (41a) should be ungrammatical: the intervening PP blocks accusative assignment to the clause-final direct object. Further, the head-initial VP hypothesis is not able to yield an account of the grammaticality of (41b) without adding undesirable stipulations such as verb-lowering and leftward accusative Case assignment. Now, contrast (41a) with an analogous English sentence like (42), which is indeed ungrammatical.

(42) *I gave to the boy a book.

Because (41a) is grammatical, we are forced to assume that the direct object does have Case. The only way it could get Case from the verb is if the verb were to its right, as in (41b), but moved to another position for discourse-pragmatic reasons. A head final VP provides a simple explanation for the grammaticality of (41): the verb assigns Case to its direct complement under government. In so doing, we maintain that in

Kashmiri the canonical government direction is leftward. In assuming a head-final VP, all we will need to do to account for the word order is to motivate the finite verb movement to clause-second position, which we do in chapter 5.

The third and final problem in assuming a head-initial VP for Kashmiri is clause-final verbal complexes and the relative order of the elements of the verbal complex in relative and adverbial subordinate clauses as shown in (43a) and (43b), respectively.

(43a) [RC yi ba khyv-aan chus] su chuyi-aa
what I eat-NPerf aux that aux-Q

tse khosh karaan
you like

Do you like what I eat?

(43b) [AdvC yelyi su baat gyvaan oos] kamras
when he song sings aux room

manz aas tshop gatsaan
in aux quiet goes

It used to get quiet in the room when he would sing.

Assuming a head-initial VP, we will need to account for the main verb — auxiliary verb order (typical of SOV languages) in Kashmiri relative and adverbial clauses as in (43). Motivating these movements and ensuring the main verb — finite verb clause-final order will require adding some stipulations, which is unnecessary as well as undesirable. On the other hand, if we assume a head-final VP, we will only have to block finite verb movement to clause-second position in relative and adverbial clauses: The details of this behavior are discussed in the next chapter, and an account of it is presented in chapter 5.

In conclusion, then, a more elegant account of the Kashmiri VP can be made if we assume that the Kashmiri VP, like other lexical projections discussed above, is head-final. This assumption, coupled with the VP-internal subject hypothesis, leads to a fairly simple mechanism of theta role assignment: all theta roles are assigned/discharged to the left by the verb to all its arguments within the VP projection. I summarize the generalizations about the Case and θ-theoretic facts observed in Kashmiri in (44) below:

(44)

	θ assignment	Case assignment
N (Gen)	Left	Left
P (Obl)	Left	Left
A (Obl)	Left	Left
V (Acc)	Left	Left

3.3 THE FUNCTIONAL PROJECTIONS

First, let us remind ourselves of the word order facts in Kashmiri. I have, so far, argued that Kashmiri is a head-final language, and further I have assumed that the presence of the finite verb in the clause-second position is a result of its movement from the clause-final position. If so, then it follows that the head of the functional projection which hosts the finite verb must be head-initial, otherwise the word order facts in Kashmiri will not receive an account. In (45) below, I present some more data to show that in declarative clauses Kashmiri also allows non-subjects in clause-initial position which must be immediately followed by the finite verb, the phenomenon that is often called the *verb-second constraint*.

(45a)

kitaab	dits	laRk-an	koor-yi
book(N,f,sg)	gave(f,sg)	boy(E)	girl(D)

The boy gave a book to the girl.

(45b)

koor-yi	dits	laRk-an	kitaab
girl(D)	gave (f,sg)	boy(E)	book(N,f,sg)

The boy gave a book to the girl.

(45c)

raath	dits	laRk-an	koor-yi
yesterday	gave(f,sg)	boy(E)	girl(D)

kitaab
book(N,f,sg)

Yesterday the boy gave a book to the girl.

(45d)

kamras	manz	dits	laRk-an	koor-yi
room	in	gave(f,sg)	boy(E)	girl(D)

kiitab
book(N,f,sg)

The boy gave a book to the girl in the room.

Following the two hypotheses posited earlier, (34) and (37), I suggest that the order of constituents in (45) is derived by means of two operations: (i) move any NP to clause-initial position, and (ii) move the finite verb to clause-second position. In chapter 5, I will argue that the finite verb moves to the head of a functional projection, MP via head-to- head movement, respecting the Head Movement Constraint (Baker 1988, Travis 1984). I will further assume that the structure of the functional projections in Kashmiri is the one given in (46) below:

(46)

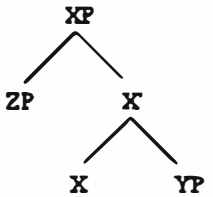

Kashmiri thus shows a split between lexical and functional projections: the lexical projections are head-final, whereas the functional projections are head-initial. It is not uncommon for a language to exhibit both head-final and head-initial projections. German and Dutch are S-O-V languages yet the Comp projection in both languages is systematically analyzed as head-initial (cf., Haider and Prinzhorn 1986, Weerman 1989). There is some evidence that in Kashmiri the heads of functional projections above VP (AGR, TP, and MP) must be head-initial in order to serve as possible landing sites for optional verb movement in relative clauses, as shown in (47) below: [10,11]

[10] For a detailed description of this verb movement, see chapter 4, sec. 4.3.2.1.

[11] It is also possible to consider an alternative to this verb movement account, namely, that the auxiliary verb remains in its base position and that everything else is scrambled rightwards. I discard this possibility on the basis of the fact that right-

(47a) yus laRk dohay panyis kamraz manz batI
which boy daily self's room in food

khyvaan chu
eats aux

The boy who eats his food in his room every day.

(47b) ?yus laRk dohay panyis kamraz manz **chu**
which boy daily self's room in aux

batI **khyvaan**
food eats

The boy who eats his food in his room every day.

(47c) ??yus laRk dohay **chu** panyis kamraz manz batI
which boy daily aux self's room in food

khyvaan
eats

The boy who eats his food in his room every day.

(47d) *yus laRk **chu** dohay panyis kamraz manz
which boy aux daily self's room in

batI **khyvaan**
eats food

The boy who eats his food in his room every day.

The examples (47b) and (47c) indicate various places where the finite verb can optionally appear. Example (47d) indicates that in relative clauses, verb-second is prohibited. One plausible account of the data in (47b) and (47c) is to assume that the functional projections above VP are head-initial and possible landing sites for finite verb movement.

---

scrambling constituents in Kashmiri obligatorily bear secondary focal stress. In (47a) - (47c), the constituents after the auxiliary verb bear no stress at all.

3.4 COMPLEMENT *ki* CLAUSES

In this section, I will explore the distribution of finite complement clauses that always appear to the right of the matrix clause, which we find in right branching languages such as English. Finite complement clauses in Kashmiri introduced by the overt complementizer *ki* are systematically excluded from appearing in sentence-internal position. Consider the contrast in (48): in spite of the fact that the preverbal object position is the unmarked position for objects, *ki*-complements cannot occur preverbally. Similarly, like object complements, subject complements of predicate adjectives (49) also show that these *ki*-complements, interpreted as arguments of a predicate, do not occur in the syntactic positions where other arguments occur. These clauses must occur external to the matrix clause.

(48a) laRk-as chI khabar [ki swa
boy(D) aux knowledge that she(N)

yii-na]
come-Fut-Neg

The boy knows that she will not come.

(48b) *laRk-as chI [ki swa yii-na]
boy(D) aux that she(N) come-Fut-Neg

khabar
knowledge

The boy knows that she will not come.

(49a) *[(yi) ki su chu lingvistikis paraan]]
this that he aux linguistics studies

chu mahatavpurn
aux important

The fact that he studies linguistics is important.

(49b) yi chu mahatavpurn ki [su chu lingvistikis
this aux important that he aux linguistics

paraan]
studies

The fact that he studies linguistics is important.

The ungrammaticality of (48b) and (49a) shows that in Kashmiri, finite complement clauses cannot be internal to the matrix clause. These finite complements, as (48b) and (49b) show, are always external adjuncts. The interesting generalization about these finite complements is that they are possible only in positions that are not assigned Case. This contrasts with the nonfinite complements which appear in governed (Case-marked) positions. Consider the contrast in (50) below:

(50a) laRk chu yetshaan [ki su kheyi-hee
boy(N) aux wants that he ate-Subj

batI]
food

The boy wants that he should eat food.

(50b) *laRk chu [ki su kheyi-hee batI]
boy(N) aux that he ate-Subj food

yetshaan
wants

The boy wants that he should eat food.

(50c) laRk chu [PRO batI khy-on] yetshaan
boy(N) aux food eat-Inf wants

The boy wants to eat food.

(50d) laRk chu yetshaan [PRO batI khy-on]
boy(N) aux wants food eat-Inf

The boy wants to eat food.

More evidence for this distributional difference between finite and nonfinite complements comes from the fact that certain verbs like

majbuur karun 'to force' require lexical Case on their clausal complements. As shown in (51) below, the (Oblique) postpositional Case appears on the infinitive gerund (51a) but not on its finite counterpart (51b), which appears right adjoined to the matrix clause. Instead, the postpositional Case in (51b) appears on the NP which appears in the argument position to the left of the verb. The finite complement gets its theta role and Case indirectly by virtue of coindexation with the NP in the argument position.

(51a) raam-an kor me [PRO batI khya-nI]
Ram(E) did I(D) food eat-Inf-(O)

khaatr majbuur
for force

Ram forced me to eat food.

(51b) raam-an kor me [ath kathyi pyaath]$_i$ majbuur
Ram(E) did I(D) this matter on force

[$_i$ ki ba khyam-haa batI]
that I(E) eat-Cont food

Ram forced me to eat food.

One plausible hypothesis that emerges from the data in (48) to (51) is that finite complement clauses do not occur in governed positions. Since the argument positions are governed and can be assigned Case, finite complement clauses are systematically excluded from these positions.[12] The incompatibility of finiteness and Case is presumably due to Stowell's (1981:146) Case Resistance Principle [CRP] which states:

(52) Case Resistance Principle: Case may not be assigned to a category bearing a Case-assigning feature

Stowell has argued that the feature [+Tense] resides in Comp and carries Case assigning properties. While nonfinite clauses can appear in argument positions, a finite clause cannot appear in the Case-marked position due to CRP. The finite complement clause in argument position (50b) will not receive Case and will make it invisible for theta marking, yielding its ungrammaticality.

[12] For Hindi, a related Indo-Aryan language, a similar account has been proposed by Srivastav (1990), and (1991:183, passim), and Khan (1989).

To summarize the arguments thus far, finite *ki* -clauses are prohibited from occurring in governed, Case-marked positions, and therefore they necessarily occur as adjuncts outside the domain of a governor/ Case assigner.[13] I suggest, following Stowell (1981), that although finite complement clauses have an argument interpretation, they are syntactically external to the normal argument position. With respect to the externalization of these complement clauses, there are two alternatives. One alternative proposed by Stowell (1981) for English is that finite complement clauses originate in A-positions and are later extraposed leaving a coindexed gap or a pronoun. The argument interpretation is derived by reconstruction at LF. The other alternative is to assume that finite clauses are base-generated as right or left syntactic adjuncts of IP (cf. Webelhuth 1989, Bayer 1990, and Davison 1992). I adopt the latter alternative: in Kashmiri, finite complement clauses are base-generated as syntactic adjuncts of TP.

This alternative has one advantage over the movement analysis. In a movement analysis, we have no explanation for the differences in the extraction of finite and nonfinite clauses. Nonfinite clauses, unlike finite clauses, do not leave a resumptive pronoun at the extraction site as the ungrammaticality of (53b) indicates. Finite clauses, on the other hand, are interpreted with a pronoun or a gap, as shown in (54).

(53a) laRk chu t_i yetshaan [$_i$ PRO batI khy-on]
boy(N) aux want-NPerf food eat-Inf

The boy wants to eat food.

(53b) *laRk chu yi_i yetshaan [$_i$ PRO batI khy-on]
boy(N) aux this want-NPerf food eat-Inf

The boy wants to eat food.

(54a) laRk chu yi_i yetshaan [$_i$ ki su
boy aux this wants that he(N)

kheyi-hec tsuuNTh]
ate-Fut-Subj apple

The boy wants to eat an apple. [Lit. The boy wants this that he may eat an apple]

[13] This also explains why extraction out of finite complements (with the exception of complements of bridge verbs) is not possible.

(54b) laRk chu pro$_i$ yetshaan [$_i$ ki su
boy aux wants that he(N)

kheyi-hee tsuuNTh]
ate-Fut-Subj apple

The boy wants to eat an apple.

The grammaticality contrast between (53b) and (54a) motivates the analytical contrast between (53a) and (54b). In assuming a movement analysis of finite complements, the contrast between (53b) and (54a) remains unexplained. I, therefore, claim that the right-adjoined finite clauses in Kashmiri are not instances of Move Alpha; they are base-generated as right adjuncts of IP.

With respect to their interpretation, I claim, following Davison (1992), that these adjunct *ki*-clauses are associated semantically with an NP in the nearest argument position. Consider the following contrast with multiple *ki*-finite clauses:

(55a) yiitah$_i$ luukhav von [yi]$_j$ [ki tim yin]$_j$
so-many people said this that they will-come

[ki saaryni khatrI roozyi-na jaay]$_i$
that all for live-not space

So many people have said that they will come that there will be no room for everyone.

(55b) *yiitah luukhav von [yi]$_j$ [ki saaryni khatrI
so-many people said this that all for

roozyi-na jaay]$_i$ [ki tim yin]$_j$
live-not space that they will-come

So many people have said that there will be no room for everyone that they will come.

The grammaticality contrast in (55) points to the generalization that a *ki*-clause is interpreted with the linearly nearest site. In (55), the pronominal *yi* 'this' is interpreted as a variable, and the immediate constituent clause coindexed with it acts like a λ-abstractor over that variable. The grammaticality of (55a) results from the fact that the subscripted j-clause is identified with immediately preceding *yi*, whereas the following subscripted i-clause is interpreted with the remaining site, the quantified NP subject. The ungrammaticality of

(55b) results from the linear processing constraint on the λ-abstraction: between the *ki*-clause indexed as j and the argument position with which it is coindexed, there is a *ki*-clause indexed as i which intervenes.

For nonfinite clauses, I suggest that they move from a Case-marked argument position to a right adjoined A'-position via a syntactic rule of extraposition leaving a variable-bound empty category. The interpretation of extraposed nonfinite clauses is mediated either by Case or by A'-binding of an empty category.

3.5 SUMMARY

Let me now briefly summarize the main arguments of this chapter. In this chapter I claimed, contra Raina (1991), that the syntactic structure of the Kashmiri language is configurational. Arguments from Binding theory (A and C), the distribution of PRO, weak crossover, and constituent fronting in Kashmiri established my claim. Without assuming a configurational structure such as the one we have proposed in (1), these facts would remain unexplained.

Next, I presented evidence to claim that Kashmiri phrase structure makes a distinction about the complement-head order depending on whether the head is a lexical head or a functional head. Lexical heads were shown to be head-final, whereas functional projections were shown to be head-initial.

Given the head-final nature of lexical projections, the position of finite complement *ki*-clauses was discussed. These clauses appear after the matrix predicate, as we find in right branching languages like English. I argued that these clauses are base-generated as right syntactic adjuncts of TP.

CHAPTER 4
VERB-SECOND (V2) PHENOMENA

4.0 INTRODUCTION

The previous chapter provided evidence to support the claim that in Kashmiri the lexical projections (including verb) are head-final and the functional projections are head-initial. There is, however, a generalization about Kashmiri word order that I have not fully addressed yet: The finite verb in declarative main and some subordinate clauses invariably occupies the clause-second position. This generalization, known in the generative grammar as the verb-second phenomenon, holds remarkably consistently across Germanic languages, with the exception of English.[1]

In the Germanic languages, the finite verb regularly occupies the second position in the main clause, hence the "V2 constraint", but remains in its base-generated position in the subordinate clause.[2] It is with respect to this variable position of the finite verb that there has been a great deal of discussion in generative grammar over the underlying order of main and subordinate clauses (see, e.g., den Besten 1977, Thiersch 1978, Platzack 1983, 1986a, Travis 1984, 1991a, Haider & Prinzhorn 1986, Holmberg 1986, Taraldsen 1986, Tomaselli 1989, Weerman 1989, Rizzi 1989, Diesing 1988, 1990, Santorini 1989, 1992, Vikner 1991, 1995).

At a descriptive level the facts seem to be rather straightforward: there is a word order constraint **only** in declarative main clauses of Germanic languages that requires the finite verb to be the second constituent regardless of what precedes it. This phenomena of verb-second (V2) in Germanic is illustrated in main and embedded clauses

---

[1] In this chapter I will not discuss English ("residual") V2 found in questions such as (i)

(i) What has John eaten?

or in constructions with topicalised negative elements (affective operators) as in (ii)

(ii) Never have these boys eaten such a rotten bread.

For a discussion of the English V2 as a subcase of V2, the readers are referred to Rizzi (1989, 1990).

[2] Haider (1991) correctly cautions us that V2 is not restricted to the root contexts in all Germanic languages. In some languages, e.g., German, V2 is constrained by the presence or absence of a complementizer.

below in (1) to (4). In the case of SOV languages like German (1) and Dutch (2), V2 is clearly observed; the finite verb occupies the position immediately after the first constituent (wherever possible we give a nonsubject-initial clause). In SVO languages like Swedish (3) and Norwegian (4), V2 can be detected only by its position relative to sentential adverbials or negatives—the Adverb-Verb order indicating no movement vs. the Verb-Adverb order indicating verb movement (V2).

German (Hans Hock, personal communication)

(1a)

Einen	Apfel	**ass**	Johann
an	apple	ate	John

John ate an apple.

(1b)

Ich	weiss	daβ	einen	Apfel	Johann	**ass**
I	know	that	an	apple	John	ate

I know that John ate an apple.

Dutch (from, Weerman 1989:14)

(2a)

de	man	**heeft**	een	book	gezien
the	man	has	a	book	seen

The man has seen a book.

(2b)

ik	geloof	dat	de	man	een	boek
I	believe	that	the	man	a	book

heeft	gezien
has	seen

I believe that the man has seen a book.

Swedish (adapted from, Platzack 1986a: 27,28)

(3a)

Erik	**hade**	verkligen	kopt	boken
Erik	had	really	bought	the-book

Erik had really bought the book.

(3b) Jag fragade om Erik verkligen
I asked if Erik really

hade kopt boken
had bought book

I asked if Erik had really bought the book.

Norwegian (from, Taraldsen 1986: 7, 8)

(4a) dette spφrsmalet **skjφnte** Jens ikke
this question understood Jens not

Jens did not understand this question.

(4b) Vi vet at Jens ikke **skjφnte** dette
We know that Jens not understood the

spφrsmalet
question

We know that Jens did not understand this question.

The standard account for the XP-$V_{[fin]}$-Subj-Obj surface order in Germanic (following Thiersch 1978, den Besten 1983) assumes two operations: a verb-fronting rule, which moves the finite verb to clause-second position, and a topicalization rule, which moves any XP to clause-initial position. After the proposals of Chomsky (1986b) that a clause be viewed as a CP, a projection of the functional head C, the complementary distribution of the fronted finite verb and a complementizer follows naturally— the finite verb moves to Comp and some XP is topicalized to its Spec. In embedded contexts, the landing site of the finite verb movement is taken up by the lexical Comp, blocking V2.

In this chapter, I will present evidence from Kashmiri to show that the straightforward accounts of Germanic V2 are not flexible enough to account for the observed variation among V2 languages. For instance, the finite verb in Kashmiri occupies the clause second position in both main **and** subordinate *ki-* 'that' clauses as shown in (5).

Kashmiri[3]

(5a) raath **dyut** laRk-an tswaTh daar-yith
yesterday gave boy(E) trash(N) throw-CP

Yesterday, the boy threw (away) the trash.

(5b) tem dop ki raath **dyut** laRk-an tswaTh daar-yith
he(E) said that yesterday gave boy(E) trash(N) throw-CP

He said that the boy threw (away) the trash yesterday.

The data in (5) negates any hypothesis of V2 that correlates verb movement with the presence or absence of an overt complementizer. Similar generalizations obtain in Yiddish (Diesing 1988, 1990, Santorini 1989) and Icelandic (Thráinsson 1986), two languages that do not show a contrast between main and embedded clauses with respect to V2. Kashmiri, however, adds a further wrinkle to these typologically contrasting V2 languages. In Kashmiri relative clauses and adverbial subordinate clauses, V2 is blocked, as the contrast in the data in (6a - d) shows.

(6a) yus laRk raath batI khyv-aan **oos**
which boy yesterday food eat-NPerf was

The boy who was eating food yesterday.

(6b) *yus laRk **oos** raath batI khyv-aan
which boy was yesterday food eat-NPerf

The boy who was eating food yesterday.

[3] In (5), we use a compound verb, such as *daar yith dyun* "to throw away", where the main verb (the first element of the compound) provides the meaning but does not inflect, while the second (explicator) verb does not provide meaning but inflects for tense, aspect and agreement; we assume both units of the compound verb to be base-generated in one position, as sisters.

(6c) yelyi ba paRhaaii khatam **kar**
when I studies finish do-Perf

When I finish my studies.

(6d) *yelyi **kar** ba paRhaaii khatam
when do-Perf I studies finish

When I finish my studies.

The questions that the data in (1) to (6) raise are the following: (i) What are the properties of grammatical principles that underlie the phenomena of V2? and (ii) Can a theory of V2 provide a satisfactory way of characterizing the typological distinction in natural languages, viz., V2 vs. non-V2? These questions subsume three different, but related questions: (i) What is the landing site of verb movement? (ii) What triggers V2? and (iii) What, if any, is an account of the variation observed in V2 languages?

With these three questions in mind, I will present a detailed investigation of the Kashmiri *Vorfeld* — the position(s) preceding the finite verb. A detailed account of the Kashmiri *Vorfeld* leads to several important empirical generalizations about the number and nature of syntactic categories that can precede the finite verb. On close inspection of the Kashmiri *Vorfeld*, it turns out that there is only one Focus position immediately preceding the finite verb which may be preceded by a contrastive ("as for") Topic (adjoined) position. In these constructions, then, the preferred order is V3: Topic-WH-Vfin.[4] Additionally, the discussion of relative and subordinate adverbial clauses demonstrates how Kashmiri exhibits both the Yiddish and Icelandic type as well as the German/Dutch type of V2.

In what follows now, I will explore the various clausal positions where the finite verb appears in Kashmiri — first, second, third, and final.

4.1 KASHMIRI *VORFELD*

In this section, I discuss the kind and number of constituents that can precede the finite verb. In the declarative matrix and subordinate *ki*-clauses, V2 is the norm, whereas in interrogative clauses V3 is generally the norm: Topic-WH-Vfin-... Kashmiri also exhibits V3 order in Left Dislocated (LD) constructions, though these are marked

[4] Later in section 4.1.2 I argue that the Focus position is the same as the *wh*-position.

(less common) constructions. The V2 order is discussed in the subsection 4.2.1 and the V3 order in the subsection 4.2.2. The exceptions to the V2 and V3 orders, for example in relative clauses and subordinate adverbial clauses, are discussed in section 4.3.

4.1.1 V2 Clauses

4.1.1.1 Main Clauses

Earlier in chapter 3, I argued that the underlying order of Kashmiri is S-O-V, yet the surface order of a Kashmiri declarative matrix clause is verb-second, as we see in (7):

(7a) ramesh-an **mutsroov** darvaaz
Ramesh(E) opened door(N)

Ramesh opened the door [It was Ramesh who opened the door].

(7b) darvaaz **mutsroov** rameshan
door(N) opened Ramesh(E)

Ramesh opened the door [It was the door that Ramesh opened].

In (7), the verb is not in the clause-final position; rather, it is preceded either by the subject (7a) or by the object (7b). (7a) order is obtained as a response to a question like "who opened the door?" and (7b) order is obtained in response to a question like "what is it that Ramesh opened?". In each case, however, the clause-initial constituent is pronounced with stress (indicated by the use of larger font size) and a falling pitch which correlates with the semantic interpretation given in square brackets. In other words, in a given verbal interaction (discourse) it is generally the case that the most emphatic constituent of the sentence occupies the clause-initial position: I will call this position the focus position. As we will see later, it is to this position (the preverbal position) that the *wh*-phrase moves. The movement to clause-initial position then involves only the phrase constituting the focus of the sentence. This is confirmed by the clefted interpretation we get for the initial constituent in (7). I claim that the movement of a constituent to clause-initial/preverbal position is an instance of Focus movement, and not topicalization.

There is independent evidence that the clause-initial (more specifically preverbal) position in Kashmiri is the focus position. In

Kashmiri, certain phrases, like *kaNh* 'someone', are inherently unfocused, and when placed clause-initially result in awkward constructions. The contrast in (8) vindicates this claim.

(8a) ?* kaNh oosuyi tse tshaanDaan
someone was you looking

Someone was looking for you.

(8b) tse oosuyi kaNh tshaanDaan
you was someone looking

Someone was looking for you.

In Hindi, another Indo-Aryan language, there is no syntactic *wh*-movement (see among others, Mahajan 1990). However, even in Hindi, the preferred order in interrogative clauses is the one where the *wh*-word immediately precedes the verb, as the contrast in (9) shows.[5] The order in (9b) is considered by some Hindi speakers marginal at best. Compare also (9c) which is the preferred "unmarked" order.

(9a) aap-ke ghar kal shaam-ko uuNchaa-
you-of home yesterday evening(D) loudly-

uuNchaa kaun chilaa rahaa thaa
loudly who scream Prog was

Who was screaming loudly last night at your house?

(9b) ?? kaun aap-ke ghar kal shaam-ko
who you-of home yesterday evening(D)

uuNchaa-uuNchaa chilaa rahaa thaa
loudly-loudly scream Prog was

Who was screaming loudly last night at your house?

[5] This observation is independently confirmed by Hans Hock (personal communication).

(9c) ramesh kal shaam-ko uuNchaa-uuNchaa
Ramesh yesterday evening(D) loudly-loudly

kahaaN chilaa rahaa thaa
where scream Prog was

Where was Ramesh screaming loudly last night?

Getting back to Kashmiri, there is some more evidence, indirect however, that XP fronting cannot be a case of topicalization. May (1977:146-147) has argued that topicalization is incompatible with universal quantification.[6] In Kashmiri, universally quantified subjects and objects can move to the clause-initial position, as the data in (10) suggests.

(10a) saaryivi khyav batl
everyone ate food

Everyone ate food.

(10b) sooruyikeNh khyav rameshan
everything ate Ramesh

Ramesh ate everything.

And finally, there are focus particles in Kashmiri like *-ti* which have the same function as the English word *even*. The only position where words with these particles must appear is the clause-initial position, crucially (finite) verb-initially, as shown by the contrast in (11).[7]

---

[6] I should note here, as one of the reviewers points out, that May's claim may be wrong at least if the universally quantified NP is D-linked, as shown by the (reviewer's) data below:

(i) See those trees over there? Every one of them, I planted myself.

In Kashmiri, however, XP-fronting is not restricted only to D-linked universally quantified NPs, as seems to be the case for English.

[7] There is a particle for "only" in Kashmiri "-yioot", and it patterns like the particle "-ti".

(11a) huun-ti chu behna broNh panin jaay goD
dog-even is seat before self's place first

saaf karaan
clean do-NPerf

Even the dog cleans his place before sitting.

(11b) ?* panin jaay chu huun-ti behna broNh goD
self's place is dog-even seat before first

saaf karaan
clean do-NPerf

Even the dog cleans his place before sitting.

So far we have seen that the initial position in V2 clauses is the focus position, the position to which focused constituents move. In the next subsection, I will provide more evidence from *wh*-questions and left-dislocated constructions to claim that the pre-(finite) verbal position is the focus position.

There are, however, certain restricted contexts in which the initial element does not appear stressed. These are constructions which have either subjects (12a) or temporal adverbs (12b) in the clause-initial position.[8] Any other constituent in this position appears with sentential stress (12c).

(12a) rameshas cha azkal shiilaa khosh karaan
Ramesh is these days Sheila happy do-NPerf

(i) Ramash likes Sheila these days.
(ii) [With a slight pause after *Ramesh*] As for Ramesh, he likes Sheila these days.

---

[8] Scene-setting locatives also behave like temporals: they may appear clause-initially without any stress associated with them, as shown below. (i) is a typical response to a question like "What do people do here?"

(i) yetyi cha luukh puuza karaan
here is people prayer do
People pray here (Lit: People do their prayers here).

(12b) azkal cha rameshas shiilaa khosh karaan
these days is Ramesh Sheila happy do-NPerf

(i) These days Ramesh likes Sheila.
(ii) [With a slight pause after *these days*] As for these days, Ramesh likes Sheila.

(12c) shiilaa cha rameshas azkal khosh
Sheila is Ramesh these days happy

karan
do-NPerf

It is Sheila whom Ramesh likes these days.

The generalization is the following: In V2 clauses, subjects and adverbs can appear clause-initially without any focal stress associated with them. Other nonsubject arguments are permitted to appear clause-initially only if they bear focal stress. I suggest that this stressed vs. unstressed asymmetry can be derived by appealing to the economy principles. I will assume that an optimal derivation without any constituent bearing focal stress will leave the Spec-MP empty. Assuming, for now, that specifiers of functional projections must be filled, the operation Merge will add an adverb (if available in the numeration) to fill the Spec; of course, the operation Merge is costless, and therefore the resulting derivation is most economic, i.e., optimal. Now if the adverb is not available (or already merged in the functional complex at/below TP), then the Minimal Link Condition will force the subject — closest to the head M with a strong (operator; Topic) feature — to fill the Spec-MP position. In other words, when both subject and object are potential candidates for Move to the target Spec-MP, the derivation will choose the (hierarchically superior) subject since it is the candidate closest to the target.[9,10] The only way left for a nonsubject

[9] In chapter 6, especially section 6.2, I have presented evidence to claim that the position immediately following the finite verb (Spec-TP) is reserved for S-Structure subjects.

[10] Such sentences in Kashmiri represent instances of topic-comment/link-focus construction (cf. Lambrecht 1994, Vallduví 1992). In other words, when a subject, (12a) above, or an adverb, (12b) above, occupies the sentence-initial position without any stress, then it is interpreted as a "topic" (what the sentence is about, cf. Lambrecht 1994) or a "link" (usually clause-initial elements that link up with the object of thought, cf. Vallduví 1992). The syntactic structure of these sentences is unmarked with respect to information structure, i.e., without contextual and prosodic cues, the

argument to move to Spec-MP is if it is focused, as shown in (12c). If/when the focus feature is generated, then the phrase bearing focus is attracted to and must occupy (i.e., focus move to) the clause-initial Spec-MP position.

This analysis also accounts for certain subject-object asymmetries in Kashmiri with respect to fronting of certain constituents. I discuss this asymmetry very briefly now.

A little earlier I discussed the distribution of an inherently unfocused phrase *kaNh* 'someone' (recall (8) above). However, it turns out that whenever a suffix *-tshaa* (e.g., *kaNhtshaa* 'someone' [specific]) is attached to this phrase, it can appear in the clause-initial position. The semantic function of *-tshaa* is that it gives a [+specific] reading of these NPs. Given that topicalized arguments are generally associated with a semantic feature [+specific], a phrase like *kaNhtshaa* should be able to occupy the clause-initial position. This is indeed the case, as indicated in (13a). The contrasts in (13) show that although subject NP[+specific] can occur without primary stress either clause-initially (13a) or immediately following the finite verb (the canonical subject position (13b)), the unstressed object NP [+specific], however, cannot occupy the clause-initial position (13c); it appears only post-V_{fin}, as shown by the grammaticality of (13d). Given the contrast between (13a) and (13c), I conclude that subjects are fronted via a mechanism different from the one used for fronting other grammatical relations. One straightforward account for the difference is to assume that subjects (and temporal adverbs, (12b) above) are topicalized via A-movement (therefore, unstressed) whereas others are topicalized via A'-movement (hence, the associated stress).[11]

(13a)	kaNhtshaa/*kaNh	oosuyi	tse	tshaanD-aan
	someone(N)	was	you(D)	look-NPerf

Someone (specific/*generic) was looking for you.

---

clause-initial element is more than likely to be interpreted as what the sentence is about.

[11] The subject/object fronting contrast in (13) is similar to the subject/object *es* fronting in German. Thanks to Christer Platzack for bringing it to my attention. However, the fact that subjects and temporal adverbs pattern together (12a&b) requires a revision of Travis's (1991a:350) V2 analysis.

(13b) tse oosuyi kaNh/kaNhtshaa tshaanD-aan
you(D) was someone(N) look-NPerf

It was you that someone (generic/specific) was looking for.

(13c) ?*keNhtshaa oos su par-aan
something(A) was he(N) read-NPerf

He was reading something (specific).

(13d) su oos keNhsaa par-aan
he(N) was something read-NPerf

He was reading something (specific/particular).

The acceptability of (13c) is significantly improved if a slight pause follows the first constituent, indicating a left-dislocation construction type with, however, the obvious absence of a resumptive pronoun. Similar observations were noted earlier for (12a(ii)) and (12b(ii)). A reasonable account of these left-dislocated constructions (with a concomitant contrastive topic reading), following mainly the ideas of Kiss (1987), is to hypothesize that the left-dislocated phrase is adjoined to the maximal projection of the clause (in our case, the MP) and linked to (i.e., coindexed with) an empty argument position.

This hypothesis, that contrastive topics are left-dislocated constituents, makes the prediction that the contrastive topics and left-dislocated NPs will display the same distribution of acceptability in different contexts. This prediction is borne out; although contrastive topics and left-dislocated NPs are acceptable in *ki-* 'that' clauses, their acceptability is considerably reduced (marginal) in embedded adverbial clauses, as the contrast in (14) shows. A comma indicates the pause.

(14a) myaanis maalis cha khabar ki ramesh, chu
my father is knows that Ramesh is

shiilay yetshaan
sheila wants (desires)

My father knows that as for Ramesh, he likes Sheila.

(14b) myaanis maalis cha khabar ki ramesh$_i$, su$_i$
my father is knows that Ramesh he

chu shiilayi yetshaan
is sheila wants (desires)

My father knows that as for Ramesh, he likes Sheila.

(14c) ??ba hyeka telyi India vaapas gasith yelyi
I can then India return go-CP when

ramesh, yi kaam khatam karyi
Ramesh this work finish do

I will be able to go to India when, as for Ramesh, he finishes this work.

(14d) ?? ba hyeka telyi India vaapas gasith yelyi
I can then India return go-CP when

ramesh$_i$, su$_i$ yi kaam khatam karyi
Ramesh he this work finish do

I will be able to go to India when, as for Ramesh, he finishes this work.

So far we have seen that in finite clauses there is one position in front of the finite verb which is occupied by a focused constituent or, in subject- and adverb-initial clauses, a topicalized (unstressed) constituent.

Next I explore the restrictions on the range of syntactic categories that are allowed to move to the clause-initial position. It is evident from data in (15) that any constituent can move to the clause-initial position. Notice that in all grammatical instances, (15a-d), the finite verb rigidly occupies the clause-second position. Notice also that the first constituent of the clause need not be the subject; it could either be a subject (15a) or any nonsubject (15b-d): the clause-initial constituent in (15b) is a temporal adverb, in (15c) it is the indirect object, and in (15d) it is the direct object. The ungrammaticality of the sentences in (15e-g) confirms the restriction that in declarative matrix clauses exactly one, but not more than one, constituent can be fronted.

(15a) rameshan **dyut** raath laRk-as kalam
Ramesh(E) gave yesterday boy(D) pen(N)

It was Ramesh who gave a pen to the boy yesterday.

(15b) raath **dyut** rameshan akh laRk-as kalam
yesterday gave Ramesh(E) one boy(D) pen(N)

It was yesterday that Ramesh gave a pen to the boy.

(15c) laRk-as **dyut** rameshan raath kalam
the boy(D) gave Ramesh(E) yesterday pen(N)

It was the boy that Ramesh gave a pen to yesterday.

(15d) kalam **dyut** rameshan raath laRk-as
pen(N) gave Ramesh(E) yesterday boy

It was a pen that Ramesh gave to the boy yesterday.

(15e) *tem raath **dyut** akh laRk-as kalam
he(E) yesterday gave one boy(D) pen(N)

(15f) *tem raath akh laRk-as **dyut** kalam
he(E) yesterday one boy(D) gave pen(N)

(15g) *tem raath akh laRk-as kalam **dyut**
he(E) yesterday one boy(D) pen(N) gave

At this point I would also like to point out that in clauses where there is an auxiliary and a main verb, the main verb alone can also move to the clause initial position as shown in (16) below. The main verb bears the focal stress.

(16) gyav-aan oos su dohay jaan
sing-NPerf was(m,s) he everyday good

It was singing that he always did a good job of [He always sang well].

The apparent problem that data like (16) pose is that a head V has moved to a non-head position, which, given the standard assumption of GB theory (Chomsky 1986b), is disallowed. According to the Structure Preservation constraint (Chomsky 1986b), heads of projections move to head positions, and full phrases move to non-head

positions. I maintain that the Structure Preservation constraint on movement is not relaxed in cases of Kashmiri V-fronting, as (16) seems to indicate; rather, this constraint applies universally. I offer the following explanation of V-fronting, based on a suggestion by den Besten and Webelhuth (1987) [discussed in Haegeman 1992].

Briefly, I will assume that in cases like (16), the VP, not just V, has moved to clause-initial (presumably to the Spec of MP) position carrying with it, wherever necessary, VP-internal traces.[12] In other words, (16) is an instance of VP-fronting. In Kashmiri, VPs can be fronted, as data in (17a) shows. In (17b), I show that the subject and the verb do not form a constituent and, therefore, cannot occur clause-initially. In (17c), I show that a whole clause (as a constituent) can be fronted.

(17a) dodI cavaan oos su dohay waar-waar
milk drinking was he daily slowly

It was drinking milk that he always took a lot of time with [He always drank milk slowly].

(17b) * su cavaan oos dohay dodI waar-waar
he drinking was daily milk slowly

He drank his milk always slowly.

(17c) [tem-sund pro ran-un] kor-na myaanyi
she-of cook-Inf did-Neg my(E)

baayi pasand
brother(E) like

It was her cooking that my brother did not like (approve of).

Thus, it turns out that the fronting of non-maximal projections to clause-initial position is only illusionary. I maintain the hypothesis that nonheads cannot move to Spec positions, which only host maximal projections. This hypothesis also explains another restriction on what can appear in the Kashmiri *Vorfeld*.

---

[12] The status of the traces that are carried by the fronted VP may raise some concern, assuming that traces must be bound by their antecedents. I will assume, for now, that the mechanism of reconstruction can account for this (see Haegeman 1992, for a detailed exploration of this issue).

As the data in (18) indicate, it appears that in the Kashmiri *Vorfeld*, not every syntactic constituent can be fronted. So, for example, quantifiers (18) and determiners (19) cannot appear by themselves in clause-initial position, as shown by the contrast in (18) and (19).

(18a) *saaryivi khyav laRkav batI
all(E) ate boys(E) food(N)

As for all (the boys), they ate food.

(18b) laRkav khyav saaryivi batI
boys(E) ate all(E) food(N)

As for the boys, all of them ate food.

(18c) *sooruyi khyav laRkav batI
all(N) ate boys(E) food(N)

As for all (the food), the boys ate it.

(18d) batI khyav laRkav sooruyi
food(N) ate boys(E) all(N)

It was the food that the boys ate all of.

(19a) *su chu laRk kooryan vuch-aan
that is boy(N) girls(D) see-NPerf

As for that boy, he sees (watches) the girls.

(19b) su laRk chu kooryan vuch-aan
that boy(N) is girls(D) see-NPerf

As for that boy, he sees (watches) the girls.

Assuming that quantifiers head their projection QP and select an NP, the ungrammaticality of (18a) and (18c) follows as a violation of the Structure Preservation constraint. A similar explanation can be offered for the restriction on fronting of determiners. Assuming the DP hypothesis (Abney 1987), determiners head their own projections (DP) and select an NP. Now, when the determiner, a non-maximal phrase, is moved to the clause-initial (Spec-MP) position, it violates the Structure Preservation constraint on movement.

We now face a familiar theoretical dilemma. Having shown that non-maximal syntactic categories are disallowed in clause-initial position whereas maximal projections (including clauses) are allowed, there is no explanation for why the so-called small clauses in Kashmiri are disallowed in clause-initial position, as suggested by the un-grammaticality of (20a).[13,14]

(20a) *ramesh paagal baasyav me
Ramesh stupid seemed me(D)

To me, Ramesh seemed/appeared stupid.

(20b) ramesh$_i$ baasyav me [t$_i$ paagal]
Ramesh seemed me(D) stupid

It is Ramesh that I find stupid.

(20c) paagal$_i$ baasyav me [ramesh t$_i$]
stupid seemed me(D) Ramesh

It is stupid that I find Ramesh (not intelligent).

For the observed contrast in (20), I offer the following explanation, however tentative. First, it is possible to assume that a small clause does not form a constituent in the same sense that subject and predicate form a constituent (=IP). Recall that in (17), evidence was provided to claim that only constituents, however large, can occupy clause-initial position. Further evidence in (18) and (19) showed that non-maximal projections are disallowed in clause-initial position. Now it has been standardly assumed that small clauses are indeed maximal projections (Stowell 1981, Radford 1988). So, the only choice we are left with is to assume that the members (immediate constituents) of the small clause in (20) do not form a constituent. This assumption is indeed supported by the fact that in Kashmiri interrogative clauses, the *wh*-phrase moves to the preverbal position, and indeed the whole constituent containing the *wh*-phrase can pied-pipe as shown in (21).

---

[13] Swedish (Christer Platzack, p.c.) does not allow fronting of small clauses either. Compare, Han fann Erik dum 'he found Erik stupid' with *Erik dum fann han 'Erik stupid found he'.

[14] One of the reviewers has pointed out to me the controversy sorrounding the existence of small clauses. Williams (1983) and, relatively recently, Hoeksema (1991) have argued against the existence of small clauses.

(21a) temis kyaa$_i$ chu [t_i khyath] neer-un
he(D) what is eat-CP leave-Inf

What is he eating before he has to leave?

(21b) temis [kyaa khyath]$_i$ chu t_i neerum
he(D) what eat-CP is leave-Inf

What is he eating before he has to leave?

Note that in a small clause (22) below, pied-piping is not an option, suggesting that the members [NP AP] of the small clause do not form a constituent.

(22a) temis kus$_i$ baasyav [t_i paagal]
he(D) who appeared stupid

Who appeared stupid to him?

(22b) *temis [kus paagal]$_i$ baasyav t_i
he(D) who stupid appeared

Who appeared stupid to him?

Finally, as additional evidence for V2 holding in Kashmiri, I discuss the distribution of the dummy pronoun *yi* ('this', 'it'). When nothing in a finite matrix clause is topicalized, not even the subject which generally acts as the discourse topic by default, dummy *yi* is inserted. This Kashmiri dummy *yi* should not be confused with other topic pronominals such as the German *es*, or Icelandic það which are not nearly as severely restricted in their distribution as the Kashmiri dummy *yi*. Compare Icelandic with Kashmiri.

(23a) Icelandic
það rigndi i gaer
It rained yesterday

It rained yesterday.

(23b) Kashmiri

*yi	pyav	raath	ruud
this	fell	yesterday	rain

It rained yesterday.

(23c) Kashmiri

raath	pyav	ruud
yesterday	fell	rain

It rained yesterday.

Peter Hook (personal communication) points out that in folk tales (e.g., Hatim's Tales) *yi* (among other demonstratives) is used as an expletive.

(24)

yi	oos	akh	baadshah
this	was	a	king

(Once upon a time there) was a king.

4.1.1.2 ki-Clauses

I now turn to declarative subordinate *ki* -clauses in Kashmiri which invariably show verb-second. These clauses, introduced by what is traditionally designated as complementizer *ki* 'that', display the same restrictions before the finite verb as matrix declarative clauses. This is shown in (25) below.

(25a)

me	buuz	**ki**	rameshan	**vuch**	raath
I	heard	that	Ramesh	saw	yesterday

shiila
Sheila

I heard that, it was Ramesh who saw Sheila yesterday.

(25b)

me	buuz	**ki**	raath	**vuch**	rameshan	shiila
I	heard	that	yesterday	saw	Ramesh	Sheila

I heard that, it was yesterday that Ramesh saw Sheila.

(25c) me buuz **ki** shiila **vuch** rameshan raath
I heard that Sheila saw Ramesh yesterday

I heard that, it was Sheila who Ramesh saw.

(25d) *me buuz **ki** rameshan raath shiila
I heard that Ramesh yesterday Sheila

vuch
saw

I heard that Ramesh saw Sheila yesterday.

In all of the allowable permutations in the subordinate clause above, the clause-initial constituent bears heavy stress and always gets the focus (clefted) reading. I will, therefore, assume that the clause-initial constituent has moved via focus movement; its pragmatic function is to contrast the fronted constituent with some other constituent.

Hooper and Thompson (1973) have argued that, at least in English, embedded topicalized clauses are "assertions." This claim holds for some mainland Scandinavian languages (Andersson 1975, Platzack 1986a). In these languages, embedded topicalization with V2 is restricted to verbs of saying and thinking whose complements are assertions. Holmberg (1986:109) gives the following Swedish example of what he calls "Embedded Main Clauses."

<u>Swedish</u>
(26) Hasse sa (att) han var inte radd för
Hasse said that he was not afraid of

ryska ubatar
Russian submarines

Hasse said that he was not afraid of Russian submarines.

In Kashmiri, however, there is sufficient evidence that constituent fronting with concomitant V2 is not restricted to asserted clauses, as shown in (27) below. (27a) shows V2 in the complement of a bridge verb, (27b) and (27c) show it in the complement of a negative verb

(doubt, regret), (27d) shows it in an adverbial adjunct,[15] and (27e) shows it under the negated verb.

(27a) rameshan dop ki su chu-na vanyi me
Ramesh(E) said that he is-Neg now me

khotsaan
fear-NPerf

Ramesh said that as for himself, he is not afraid of me anymore.

(27h) tem-is chu shakh ki pagah hyak-na ba
he(D) aux doubt that tomorrow able-Neg I(N)

subhaayi vathith
early rise-CP

He doubts the fact that tomorrow (of all the days), I will be able to wake up early.

(27e) tem-is chu afsoos ki yi kitaab cha-yi use
he(D) aux regret that this book aux you(E)

par-mets
read-Perf

He regrets the fact that it is this book that you have read.

(27d) me cha pareshaanii [kyaazyiki shiila cha-na
I is worry because Sheila is-Neg

rameshan vachmats]
Ramesh(E) seen

This worries me because Ramesh has not seen Sheila.

---

[15] The 'because' adverbial subordinator in Kashmiri, *kyazyiki* is morphologically complex. It is formed by conflating two morphemes:*kyaazyi* 'why' + *ki* 'that, subordinator'.

(27c) rameshan dopnam-na ki pagah vathyi
Ramesh(E) said-Neg that tomorrow wake

shiila sulii
Sheila early

Ramesh did not say that, as for tomorrow, Sheila will get up early.

The important generalization here is that the presence of the complementizer does not affect V2 in Kashmiri; there is no asymmetry between main and subordinate *ki* -clauses as we noticed earlier in (1-4) for Germanic languages.

Before moving on to the next subsection, I propose a plausible hypothesis of the movement of a constituent to clause-initial position. As noted earlier, Kashmiri makes a distinction as to whether the moved element is an instance of topicalization, as when the the subject NP moves in topic-comment structures, or whether the moved constituent is an instance of focus movement, as suggested by the focal stress with a concomitant clefted interpretation.

Recently, Chomsky (1993) has sugg sted, in outlining his feature-checking theory, that operations like raising to Spec-CP are necessitated by the requirement that (morphological) features must be checked in the checking domain of the head or the derivation will "crash." He further suggests (1993:32) that "[t]opicalization and focus could be treated the same way" as *wh*-movement by assuming that they are driven by the need to check the feat re Top or Focus in the checking domain of the appropriate head.

I suggest that the features [+Top] and [+Focus], a morphological property of operators such as Topic, Focus, etc., are checked in V2 clauses[16] in M^0: the clause-second position in the phrase structure we have earlier proposed in Chapter 3 (I postpone the motivation of the projection of MP to next chapter). Assuming that in Kashmiri the operator features [+Top], [+Focus] are "strong," in the sense of Chomsky (1993), and given the Kashmiri data we have observed so far, it is indeed the case that topicalization or Focus fronting must be overt (in the syntax, i.e., before "Spell Out"). This hypothesis also explains why at least one *wh*-phrase in Kashmiri must be clause-initial, more appropriately, immediately preceding the finite verb. I discuss this in detail in the next subsection.

---

16 For interrogative clauses I find an analogous assumption being made in the literature: an abstract Q (wh) morpheme is licensed in Comp (for a recent proposal, see Chomsky 1993).

4.1.2 V3 Clauses

The V3 orders are typically found in (i) left-dislocated and contrastive left-dislocated constructions in declarative matrix and subordinate clauses, and (ii) interrogative clauses. The left-dislocated constructions are discussed first.

4.1.2.1 Declarative Clauses

The left-dislocated constituent in Kashmiri represents a separate phonological phrase; it gets a mild (as opposed to heavy focal) stress and is separated from the rest of the clause by a slight pause. These dislocated constituents always express a contrastive topic interpretation. The constituent following the left-dislocated constituent bears heavy (focal) stress (indicated by a larger font) and gets a clefted interpretation. The left-dislocated phrase is base-generated in a position adjoined to the clausal projection (MP) and linked to a demonstrative (resumptive) pronoun in its base position. In the contrastive left-dislocation constructions in Kashmiri, the left-dislocated constituent is linked to a resumptive demonstrative in Spec-MP which is in a chain with an empty base position. In both of these constructions, the left-dislocated phrase is always in the nominative Case; it does not exhibit the same Case as the clause-internal constituent that it is coindexed with. The data in (28) are instances of left-dislocation, whereas the data in (29) are instances of contrastive left dislocation.

(28a) su laRk$_i$, **pananyivi$_j$** achav vuch rameshan$_j$ temis$_i$
that boy(N) **self's** eyes saw Ramesh(E) he(D)

As for that boy, it is with his own eyes that Ramesh saw him.

(28b) su laRk$_i$, **rameshan** vuch temis$_i$ tsuur karaan
that boy(N) **Ramesh(E)** saw he(D) theft do-NPerf

As for that boy, it is Ramesh who saw him stealing.

(28c) tem dop ki, coon kalam$_i$, shiilaayi tshooND
he said that your pen(N) Sheila(D) found

su$_i$
that(N)

He said that as for your pen, it is Sheila who found it.

(29a) coon kalam$_i$, su$_i$ goyi me garyi
your pen(N) that(N) gone I(D) home-at

mashith
forget

As for your pen, that (is what) I forgot at home.

(29b) tem dop ki, coon kalam$_i$, su$_i$ goyi me
he said that your pen(N) that(N) gone I(D)

garyi mashith
home-at forget

He said that as for your pen, that (is what) I forgot at home.

As mentioned earlier, the dislocated phrase in (28) is base-generated in a position adjoined to the clausal projection (MP) and linked to a demonstrative (resumptive) pronoun in its base position (cf. also Zaenen 1985). In the contrastive left-dislocation constructions like (29), the dislocated constituent is linked to a resumptive demonstrative in Spec-MP which is in a chain with an empty base position. The structures of (28b) and (29a) are given below in (30a) and (30b), respectively.

(30a) [$_{MP}$ su laRk$_i$, [$_{MP}$ rameshan [$_{M'}$ vuch temis$_i$
tsuur karaan]]]

(30b) [$_{MP}$ coon kalam$_i$, [$_{MP}$ su$_i$ [$_{M'}$ goyi me garyi t$_i$
mashith]]]

There is some evidence in Kashmiri that suggests that the proposed analysis of (28), that left-dislocated phrases are extra-clausal adjoined to MP, is indeed the correct account. I provide two arguments. First, it is possible to insert a parenthetical constituent after the left-dislocated

phrase (see, 31 below), confirming our suspicion that these phrases are outside of the clause.

(31) su laRk$_i$, [yi ch-aa poz] rameshan vuch
that boy(N) it is-Q true Ramesh(E) saw

temis$_i$ tsuur karaan
he(D) theft do-NPerf

As for that boy, is it true that, it is Ramesh who saw him stealing.

Second, the Case on the left-dislocated constituent is nominative, whereas in the following clause the coreferential pronoun is in the appropriate (dative) Case. This suggests that no movement is involved because the "moved" constituent carries its Case with it.

Turning to other non-interrogative V3 orders, it seems that V3 order can also appear when the first element is a discourse connective of the type such as *naturally, eventually, somehow,* etc., as shown in (32) below. These discourse connectives are always followed by a pause, indicating that they are perhaps base-generated outside the clause

(32a) kodratyi, me moklaav paniny kaam goDI
naturally I(E) finished self's work first

Naturally, I finished my work first.

(32b) moksarkarith, ba goos temund gar [ta onum
eventually I went his home [and brought

panun buuTh vaapas]
self's boots return]

Eventually, I went to his home [and got my boots back].

Before discussing the *wh*-constructions that regularly show V3 order, it is perhaps useful to point out another set of declarative matrix clauses which, though accepted only marginally, nevertheless show V3 order. In these constructions two constituents appear in the *Vorfeld;* none, however, appears to be a left-dislocated constituent, i.e., linked with a resumptive demonstrative. These constructions, however, are only accepted if the following two requirements, one semantic and the other phonological, are met: (i) the semantic interpretation of the utterance is such that the first constituent gives an "as for" topic reading, and the second constituent gives a contrastive focus reading;

(ii) there is a pause (indicated by a comma) after the first constituent, and the second constituent is heavily stressed (indicated by a larger font).

(33a) ?raath, laRkav **khyav-na** (shaam-uk) batI
yesterday boys ate-Neg (evening) food

As for yesterday, it was the boys (not the girls) who did not eat the food (dinner).

*Yesterday the boys did not eat the food.

(33b) ?raath, (shamuk)batI **khyav-na** laRkav
yesterday (evening)food ate-Neg boys

As for yesterday, it was the food (dinner, not breakfast) that the boys did not eat.

*Yesterday the boys did not eat the food.

(33c) ?batI, laRkav **khyav-na** raath
food boys ate-Neg yesterday

As for the food, it was the boys (not the girls) who did not eat it yesterday.

*Yesterday the boys did not eat the food.

There is a plausible account of the facts in (33).[17] Earlier we noted that constructions like (12a(ii)), (12b(ii)), and (13c) are left-dislocation

[17] Although an account of the empirical facts in (33) is possible, as I discuss below, it is not quite clear why these sentences are considered relatively marginal (only one question mark); in other words, it is not clear what syntactic/grammatical process/phenomenon explains their marginal status. One pragmatic explanation that seems quite plausible is that the overwhelming majority of sentences with V3 orders have a clause-initial topic followed by a wh-focus phrase, i.e., the contextually most preferred (and common) V3 order in Kashmiri is with the wh-phrase in the focus position immediately preceded by the topic position. Now, when Kashmiri speakers hear sentences where both the clause-initial constituents preceding the finite verb are non-wh, they interpret ("process") them as sentences with two topics or two focii in the *Vorfeld*, which is impossible in Kashmiri. The first instinct of native Kashmiri speakers (myself included) is to reject such sentences. However, when attention is paid to the careful manipulation of pause after the first constituent (As for topic) and

constructions where the left-dislocated phrase is adjoined to the maximal projection of the clause (in our case that is MP) and coindexed with an empty argument position. I assume that something similar is going on here. In (33a,b) the temporal adverbs are base-generated adjoined to MP, and the constituent following it is moved to the preverbal focus position. For (33c), I offer the following account: the first constituent (on the left periphery) is a base-generated left-dislocated phrase coindexed with an empty argument position; the contrastive topic reading confirms this suspicion. The second constituent has moved (i.e., leaving a trace behind) to the preverbal focus position; the clefted reading of this phrase is consistent with the earlier (focus) observations. Thus, (33c) has the following structure:

(34) $[_{MP}$ batI$_i$, $[_{MP}$ laRkav$_j$ $[_{M'}$ **khyav-na** t$_j$ raath pro$_i$]]]

Now, if we focus the first constituent by suffixing a focus particle *-ta* 'even' to it, we get a completely unacceptable sentence. I show this in (35).

(35a) *batI-ti, laRkav **khyav-na** raath
food even boys ate-Neg yesterday

Even the food, it was the boys (not the girls) who did not eat it yesterday.

(35b) *laRkav-ti, batI **khyav-na** raath
boys even food ate-Neg yesterday

Even the food, it was the boys (not the girls) who did not eat it yesterday.

The ungrammaticality of (35a) and (35b) can be explained by hypothesizing that in the Kashmiri clause structure, there is only one focus position, immediately preceding the finite verb, which may be preceded by a topic (adjoined) position. In (35), there are two constituents competing for one focus position. Additional support for

---

stress on the following constituent (focus), the desired syntax/semantics of such clauses becomes available, and the sentences are, therefore, considered acceptable.
It is also possible that the marginality of these sentences may have to do with the relative infrequency in natural language discourse of contextual/pragmatic construals in which such syntactic "forms" are appropriate, which probably reduces the issue to marginal "acceptability" (not ungrammaticality).

our hypothesis comes from *wh*-questions in Kashmiri to which I turn next.

4.1.2.2 Interrogative Clauses

In Kashmiri, generally the *wh*-phrase occupies the position immediately preceding the finite verb, and this phrase is preceded by a topic phrase giving rise to the V3 order. There are, however, marked cases where the clause-initial question is a *wh*-phrase, as in (36). I indicate the marked *Vorfeld* order by a single superscripted question mark.

(36) ?kyaa dyutnay rameshan tse
what(N) gave Ramesh(E) you(D)

What is it that Ramesh gave you?

The V2 order (36) in interrogative clauses is marked; the more natural (= more acceptable) order is V3, as shown in (37). Just a slight pause after the first constituent and a heavy focal stress on the second (*wh*-) constituent gives the most unmarked order and interpretation of these *wh*-clauses.

(37a) rameshan kyaa dyutnay tse
Ramesh(E) what(N) gave you(D)

As for Ramesh, what is it that he gave you?

(37b) tse kyaa dyutnay rameshan
you(D) what(N) gave Ramesh(E)

As for you, what is it that Ramesh gave?

(37c) raath kyaa dyutnay rameshan tse
yesterday what(N) gave Ramesh(E) you(D)

As for yesterday, what is it that Ramesh gave you?

The data in (38) and (39) below indicate that in Kashmiri, topicalization is also allowed (in fact preferred) to co-occur with indirect questions.

(38a) tem prutsh me **ki** shuryav kyaa **kor**
he asked me that kids what did

az klaasas manz
today class in

He asked me, as for the children, what they did in the class today.

(38b) tem prutsh me **ki** az kyaa **kor** shuryav
he asked me that today what did kids

klaasas manz
class in

He asked me, as for today, what (is it that) the children did in the class.

(39a) tem prutsh me **ki** mastaran kemis dits
he asked me that teacher whom gave

swa kitaab
that book

He asked me, as for the teacher, to whom (is it that) he gave the book.

(39b) tem prutsh me **ki** swa kitaab kemis
he asked me that that book whom

dits mastaran
gave teacher

He asked me that, as for that book, to whom (is it that) the teacher gave it.

It must be pointed out that in direct questions, (see (40a,b)), as well as indirect questions, (40c, d), the *wh*-phrase must be immediately adjacent and to the left of the finite verb. Nothing else is allowed to intervene between the finite verb and the preceding *wh*-phrase.

(40a) ***kyaa** tem **khyav** raath
what he ate yesterday

What did he eat yesterday?

(40b) ***kyaa** raath **khyav** tem
what yesterday ate he

What did he eat yesterday?

(40c) *tem prutsh me ki **kyaa** raath **khyav**
he asked me that what yesterday ate

laRkan
boy

He asked me what the boy ate yesterday.

(40d) *tem prutsh me ki **kyaa** laRkan **khyav**
he asked me that what boy ate

raath
yesterday

He asked me what the boy ate yesterday.

One straightforward explanation for the ungrammaticality, or rather the contrast found between (39) and (40), is that the preverbal position is the focus position, as I have shown earlier, to which *wh*-phrases, which are inherently focused, must move. This focus position is preceded by the contrastive ("as for") topic position. In other words, the positions in front of the finite verb, i.e., in the Kashmiri *Vorfeld*, are (and in the order indicated) Topic-Focus-Vfin. This order was argued for earlier, particularly with reference to the data in (33) to (35). I present some more evidence to support the claim that the *Vorfeld* in Kashmiri has one topic position followed by one focus position. Consider the data in (41).

(41a) con kalam dyut rameshan shiilayi
your pen gave Ramesh Sheila

It was your pen that Ramesh gave Sheila.

(41b) *con kalam$_i$ dyut rameshan shiilayi su$_i$
your pen gave Ramesh Sheila that

As for your pen, Ramesh gave it to Sheila.

(41c) con kalam$_i$ rameshan dyut shiilayi su$_i$
your pen Ramesh gave Sheila that

As for your pen, it was Ramesh who gave it to Sheila.

(41d) con kalam$_i$ su$_i$ dyut rameshan shiilayi
your pen that gave Ramesh Sheila

As for your pen, that Ramesh gave to Sheila.

(41e) *con kalam rameshan kemis dyut
your pen Ramesh whom gave

As for your pen, as for Ramesh, who is it that he give it to?

(41f) ? con kalam$_i$ rameshan kemis dyut su$_i$
your pen Ramesh whom gave that

As for your pen, as for Ramesh, who is it that he give it to?

(41g) *rameshan con kalam$_i$ kemis dyut su$_i$
Ramesh your pen whom gave he

As for Ramesh, as for your pen, who is it that he gave it to?

I have analyzed cases like (41a) as movement to the focus position, a position immediately preceding the finite verb. The ungrammaticality of (41b), on the other hand, involves a left-dislocated phrase in the focus position, a position reserved for operator (focus/wh/topic) movement: base-generated left-dislocated phrases must be extra-clausal. (41c) and (41d) are instances of left-dislocated and contrastive left-dislocated constructions, respectively. In each case, the topic precedes the constituent immediately precedeing the finite verb that bears the focal stress.

Examples (41e) to (41g) are the interesting data for the present purposes. (41e) shows that the *wh*-phrase has moved to Spec-MP, the focus position, and two other operator (topic) movements have taken place. I have argued earlier that the topic position is an adjoined position, and assuming MP to be a bounding node, adjunction to an adjoined position results in subjacency violation (cf. Lasnik & Saito 1992), yielding the ungrammaticality of (41e). The contrast between (41f) and (41g) further supports the assumption that movement over an adjoined position is not allowed. (41f) is marginally accepted since the clause-initial NP is base-generated there, not moved, hence, getting around the subjacency violation. Its marginality is perhaps due to some discourse-semantic constraint in Kashmiri that restricts the number of topics in each clause; preferably, no more than one topic per clause. (41g), however, involves movement over an adjoined (base-generated) position, resulting in a subjacency violation, hence, the ungrammaticality. This brings us to the problem of accounting for multiple questions in Kashmiri.

Kashmiri allows multiple questions, however, one of the *wh*-phrases must move in the syntax to the position preceding the finite verb. The other *wh*-phrases may or may not move there. This is suggested by data such as (42) below.

(42a) rameshan kyaa dyut shiilaayi
Ramesh(E) what gave Sheila(D)

As for Ramesh, what is it that he gave to Sheila?

(42b) *rameshan dyut shiilaayi kyaa
Ramesh(E) gave Sheila(D) what

As for Ramesh, what did he give to Sheila?

(42c) rameshan kyaa dyut kemyis
Ramesh(E) what gave whom

As for Ramesh, what is it that he gave to whom?

(42d) rameshan kemyis kyaa dyut
Ramesh(E) whom what gave

As for Ramesh, what is it that he gave to whom?

The grammaticality of (42a) and the ungrammaticality of (42b) suggest that the *wh*-phrase must move in the syntax to preverbal focus

position. Again, the unmarked clefted reading of the *wh*-phrase, accompanied with heavy focal stress, confirms my earlier suggestion that the pre-finite verb position (Spec-MP) is the focus position, and therefore the natural landing site for *wh*-movement, given that *wh*-phrases are the natural semantic focus of the sentence in which they appear. Example (42c) shows that when there is more than one *wh*-phrase, one *wh*-phrase can be left *in-situ*. Alternatively, in (42d), I show that all the *wh*-phrases can move to the preverbal position. In fact, when all the phrases in a Kashmiri sentence are questioned, they may all be stacked before the finite verb, (43a), or some may move while others stay *in-situ* (43b, and c). The *in-situ wh*-phrases do not appear to bear any discernible focal stress.

(43a) kus kemyis kyaa dii
who whom what give-Fut

Who will give what to whom?

(43b) kus kyaa dii kemyis
who what give-Fut whom

Who will give what to whom?

(43c) kus dii kemyis kyaa
who give-Fut whom what

Who will give what to whom?

Clearly, Kashmiri *wh*-constructions behave differently from, say Bulgarian (Rudin 1981) or Hungarian (Kiss 1987) where all *wh*-phrases in multiple question constructions move to Comp, or more precisely, to the position immediately preceding the finite verb. The obligatory presence of all *wh*-phrases before the finite verb is not a requirement in Kashmiri, as should be obvious from the data in (42) and (43).

Kashmiri also differs from Hungarian in one other crucial respect: the *wh*-phrase in the focus position (immediately preceding the finite verb) does not at all require "exhaustive listing."[18] In fact, Kashmiri, as well as other Indic languages, uses "reduplication"[19] as a strategy for

[18] Kiss (1987), following Szabolcsi's (1981), considers 'exhaustive listing' as defining feature of focus function.

[19] Reduplication actually refers to duplication of a phrase/word: the prefix *re-* in the term "reduplication" is redundant, and misleading.

exhaustive listing. I provide data below to show this strategy. The speaker asks a question using a duplicated *wh*-word (44) which mandates an exhaustive answer (45).

(44) Q: tse kyaa-kyaa khyoth atyi
you what-what ate there

As for you, what all did you eat there?

(45) A: me khyeyi raazmaa gogjl, daal, ta raganjosh
I ate beans turnip, lentils and Roganjosh

As for me, I ate beans and turnip, lentils and Roganjosh (a Kashmiri lamb preparation)

A response like (46) would be inappropriate to the question asked in (44) because it does not contain an exhaustive list of (possible) dishes that the person may have actually eaten.

(46) *me khyav batl tetyi
I ate food there

As for me, I ate dinner there.

The conclusion that can be drawn from the data in (42)-(46) is that the relative order of *wh*-phrases is free. The different permutations of *wh*-phrases before the finite verb does not change the semantic-communicative interpretation of the sentence, as suggested by the data in (47).

(47a) ?kemyi kyaa kemyis dyut
who what whom gave

Who gave what to whom?

(47b) ?kemyis kemyi kyaa dyut
whom who what gave

Who gave what to whom?

(47c) kemyi kemyis kyaa dyut
who whom what gave

Who gave what to whom?

The superscripted question mark in (47a) and (47b) indicates that the order of *wh*-phrases in this sentence is less preferred than the one in (47c) which is the "natural" (unmarked, more preferred) order. Since the different permutations of the order of *wh*-phrases does not alter the semantic interpretation of the sentence, it might be the case that the canonical argument configuration (Subject-Indirect Object-Direct Object) is perceived as unmarked, and any other (scrambled) order is, therefore, perceived as marked.

The problem that the data in (42) to (46) pose is the following: given that in Kashmiri there are two positions, topic and focus, in front of the finite verb (licensed perhaps by the phrase structure rules of the Kashmiri language), and further, that one of the *wh*-phrase must take the focus slot (cf. 42a, c), how do we account for the multiple *wh*-phrases stacked in front of the finite verb (43d, and 44)?

In (42a) we saw that the clause-initial position is the topic position where an unstressed XP is found. Between this topic position and the focus position, it is not possible to insert something else, as is evident from the contrast in (48).

(48a) *shilaayi paras kemyi dyut
Sheila(D) purse(N) who(E) gave

Who gave the purse to Sheila?

(48b) shilaayi kemyi dyut paras
Sheila(D) who(E) gave purse

As for Sheila, who is it that gave her the purse?

Further evidence against inserting elements between topic constituent and focus constituent comes from the contrast in the following data.

(49a) bar-as kus oos
door-at who was

Who was at the door?

(49b) yi kus oos bar-as
this who was door-at

Who was (it) at the door?

(49c) *yi bar-as kus oos
this door-at who was

Who was (it) at the door?

In Kashmiri, a demonstrative pronoun *yi* can be used as a nonargumental (dummy topic) pronominal only in the sentence-initial position. These topic pronominals are base- generated in Spec-MP as presentational/existential operators, or as adjustment particles inserted for V2 requirements.[20] These topics can also optionally appear adjoined to Spec-MP, as the data in (49b) seem to suggest. The ungrammaticality of (49c) is perhaps due to the violation of phrase structure constraints that disallow two topics in the Kashmiri *Vorfeld.*

Finally, if a focussed non-*wh*-constituent immediately precedes (50a) or follows (50b) a fronted *wh*-constituent, the sentences are ungrammatical, again forcing the conclusion that (i) the *wh*-constituent must be in a Spec-head relation with the head that hosts verb movement, and (ii) the position immediately preceding the fronted *wh*-constituent is not a focus position; it is a topic position.

(50a) *garyi-ti kus chu-na kaam karaan
at home-even who is-Neg work does

Who doesn't work (even) at home?

(50b) *kus garyi-ti chu-na kaam karaan
who at home-even is-Neg work does

Who doesn't work (even) at home?

Given all this evidence, I hypothesize that in multiple questions in Kashmiri, one *wh*-phrase must move to the focus position, presumably due to the requirements of (Focus) feature-checking (à la Chomsky 1993), whereas other phrases optionally move and sister-adjoin to the phrase moved first to the focus position. This hypothesis then predicts that all moved *wh*-phrases will have focal (heavy) stress, which indeed is the correct prediction (see (43) above).

What is true of multiple questions in a matrix clause is also true of a subordinate *ki* -clause, as suggested by the data in (51).

---

20 These dummy pronouns also appear in extraposed clauses to fulfill V2 requirements; e.g.,
yi chu poz ki shiilan hor ilekshan
it is true that Sheila lost election

(51a) tem prutsh me ki
he(E) asked me(D) that

kus kemyis kyaa dii
who whom what give-Fut

He asked me (that) who will give what to whom.

(51b) tem prutsh me ki
he(E) asked me(D) that

kus kyaa dii kemyis
who what give-Fut whom

He asked me (that) who will give what to whom

(51c) tem prutsh me ki
he(E) asked me(D) that

kus dii kemyis kyaa
who give-Fut whom what

He asked me (that) who will give what to whom.

4.2 SOME EXCEPTIONAL ORDERS

4.2.1 V1 Order

4.2.1.1 Declaratives

Verb-first (V1) orders, i.e., when nothing apparently precedes the finite verb, have a very restricted distribution in Kashmiri. First of all, these orders are never found in clauses that initiate a discourse.[21] For example, in initiating a discourse, V2 order (52a) is preferred; example (52b) just shows that V1 is unacceptable discourse-initially.[22] (52c)

---

[21] Santorini (1989:77) mentions (following Asha Tickoo p.c.) that Kashmiri allowsV1 root declaratives discourse-initially. She does not provide any data, however, to support that.

[22] (52b) can be acceptable if understood as a protest (by a sleepy/lazy child) against going to school. Even in this interpretation, this sentence is not discourse-initial; it

shows that V1 orders are licensed once the identity of the discourse topic is established. So, V1 order in (52c), as a response to (52a), is possible. V2 order (52d), as a response to (52a), is also a possibility, suggesting that V1 order is not obligatory at all.

(52a) A: az gatsh-na ba skuul
today go-Neg I school

As for today, I don't want to go to school.

(52b) A: *gatsh-na ba az skuul
go-Neg I today school

I don't want to go to school today.

(52c) B: ner tsI goD razaayi-tal, pat
leave you first blanket-under later

karav ath-pyaTh mashvar
will-do this-on discussion

First you come out of the blanket and then we'll discuss it.

(52d) B: tsI ner goD razaayi-tal, pat
you leave first blanket-under later

karav ath- pyaTh mashvar
will-do this-on discussion

First you come out of the blanket and then we'll discuss it.

Thus, it can be proposed, as a hypothesis, that V1 orders in Kashmiri are Topic-Comment structures with a missing topic.[23] It must be mentioned that in V1 clauses, it is the topic that is missing/deleted, and particularly, it is always the subject which, as I have shown earlier in subject-initial V2 clauses, acts as a discourse topic by default (cf. also fn. 10). This is most clearly seen in (53). (53a) shows that V1 order is possible in a connected (strongly

must follow something like: "Why don't you get out of the bed and get ready for school?"

[23] To use a convinient GPSG terminology, V1 clauses are => S/TopicP.

cohesive) discourse: the agreement on the verb recovers the identity of the missing topic. V1 order is also possible in those Kashmiri clauses that seem to have some conclusive force as shown in (53b).[24]

(53a) tse doputh-na-a tim neeran suulyi,
you said-Neg-Q they go-Fut early

[draay-aa pat suulyi]
go(3,pl)-Q then early

Did you not say they will leave early, (well!) did they?

(53b) goD oos yetshaan su skuuTar anun, pat
first was wanting he scooter get, then

vonun adkyaa vanyi hyam moTarsaykal,
said OK now buy-Fut mobike,

onnun moksarkaryith yi khaTaar pat
bought(3,m,s) eventually this junk then

First he wanted to buy a scooter, then he said he'll buy a mobike, eventually (it turns out) he bought this (piece of) junk.

If the hypothesis that only subject-initial topics can be deleted is correct, then it follows that imperative constructions in Kashmiri should allow V1 order. This is indeed what we find in the imperative constructions, as in (54); the data in (a, b, c) have a stronger illocutionary force (command) than their counterparts with V2 orders, (a', b', c'). The intended reading of (54b') is "Do have some more?".

(54a) **kar** panin kaam
do self's work

Do your work!

[24] In both (53a and b), there is a strong preference for V1 order, as opposed to a V2 order. We suggest that it is due to the "Avoid Pronoun Principle" (Chomsky 1981): if a pronoun can be null, it must be realized as such.

(54a') panin kaam **kar**
self's work do

Do your work!

(54b) **hyo** thoDaa beyi
take-Hon little again

Have some more!

(54b') thoDaa **hyo** beyi
little take-Hon again

Have some more!

(54c) **diyav-sa** yem-is haar
give-Hon him(D) money

Please give him money!

(54c') yem-is **diyav-sa** haar
him(D) give-Hon money

Please give him money!

Given the data we have observed (52-54), I suggest two alternatives as (tentative) explanations of the occurrence of V1 orders. As the first alternative, I suggest that in V1 clauses the finite verb moves to the head of the clausal projection (M^0), and the clause-initial topic is dropped via a discourse-governed process of topic deletion, corresponding to the discourse-governed subject deletion in English, as suggested by Santorini (1989:48; ex 18).[25]

(55) A: So he told her?
B: Yeah, (he) told her yesterday.

The other alternative is to assume a pro_{arb} in the Spec of MP, its interpretation derived from prior discourse by some version of Control Theory. I leave the choice between the two alternatives open for now.

---

[25] Pintzuk (1991) and Adams (1987) provide evidence from the distribution of clitics in Old English and Old French, respectively, to claim that V1 orders are derived from the topicalization of the finite verb in Infl to Comp. However, I know of no evidence in Kashmiri that forces an analysis of V1 as topicalization of the finite verb from M^0 to the head of a higher functional projection (presumably C^0).

4.2.1.2 Yes/No questions

As in the other V2 languages, yes/no questions in Kashmiri do, at least optionally, exhibit V1 order. However, like declarative V1, the V1 order in yes/no question cannot initiate discourse, presumably, as discussed earlier, prompted by strong discourse cohesion. A non-V1 (V2) yes/no question like (56a) can initiate discourse, but the V1 order, as in (56b), is unacceptable. However, once the discourse is initiated, like (56c), an appropriate V1 yes/no becomes possible, as the grammaticality of (56d) and (56e) suggests.

(56a) A: nebar cha-a seThaa garam
outside is-Q very hot

Is it very hot outside?

(56b) A: *cha-a nebar seThaa garam?
is-Q outside very hot

Is it very hot outside?

(56c) A: nebar chu seThaa garam
outside is very hot

It is very hot outside.

(56d) B: chu-kh-a bozaan
is-2sg-Q listening

Are you (someone, C) listening (to what A is saying)?

(56e) B: hyekav-n-a telyi asyi baazar gatshyith
able-Neg-Q hen we market go

Will we not be able to go to the market then?

To sum up, we noticed that V1 orders in Kashmiri main clauses cannot occur discourse-initially. And, further, they are restricted to only subject-initial Topic-Comment structures. Compared to other V2 languages, Yiddish (Santorini 1989) and Icelandic (Rognvaldsson and

Thráinsson 1990, Thráinsson 1986), V1 orders in Kashmiri have a restricted distribution.[26]

4.2.2 V-Final Order

4.2.2.1 Relative Clauses and Adverbial Clauses

Relative and adverbial clauses in Kashmiri generally display the verb-final order. Free and headed relative clauses are shown in (57) and (58), respectively. The adverbial clauses are given in (59). The auxiliary verb in each case follows the main verb, as is expected for verb-final languages.

---

[26] Santorini writes (1989:77) that "Kashmiri allows verb-first word order in declarative clauses more freely than Yiddish or Icelandic." This statement, however, is not correct. From the literature that we have surveyed on Icelandic (Maling and Zaenen 1990, among numerous others) and Yiddish (Santorini 1989), the freedom of V1 order is actually observed more in Yiddish/Icelandic than in Kashmiri. Whereas Yiddish and Icelandic necessarily use V1 order, Kashmiri requires V2. E.g., in Kashmiri the adversative use of V1 orders is entirely absent. In Yiddish one finds V1 order used to express adversative relations (i), whereas Kashmiri uses the familiar V2 order as shown in (ii) [adapted from Grierson (1911b)].

Yiddish (Santorini 1989:62)

(i) Er volt khasene gehat, hot er (ober) moyre
he would wedding had had he but fear
far tate-mame
before father-mother
He would marry, but he is scared of his parents.

Kashmiri

(ii) jism chu fønii, ta ruuh cha bøkii
body is mortal but soul is immortal
The body is mortal, but the soul is immortal.

Also, in Kashmiri wherever V1 order is available (iii below), V2 order is also available (iv).

(iii) kar-n-aa ba yi kaam goD khatam
do-Fut-Neg-Q I this work first finish
Why don't I finish this work first. [Lit. I should finish this work first; don't you think?]

(iv) ba kar-n-aa yi kaam goD khatam
I do-Fut-Neg-Q this work first finish
As for me, why don't I finish this work first?

(57a) yus laRk tsoT khyv-aan ch-u
which(N) boy(N) bread(f,sg) eat-NPerf aux(m,sg)

Whichever boy is eating bread . . .

(57b) yemyi laRk-an tsoT khe-yi
which(E) boy(E) bread(f,sg) ate(f,sg)

Whichever boy ate bread . . .

(57c) yath gar-as manz swa roozaan
which(O) house(O) in she(N) live(NPerf)

ch-a
aux(f,sg)

Whichever house she lives in . . .

(58a) su laRk [yus raath yath kamras manz
That boy who yesterday this room in

batI khyvaan oos]
food eat-NPerf was

The boy who was eating food in this room yesterday. . .

(58b) swa kitaab [yos tsI raath paraan
that book which you yesterday read-NPerf

oosuk]
was

The book which you were reading yesterday . . .

(59a) yelyi su paRhaii khatam kar-yi
when he(N) studies finish do

When he finishes studies . . .

(59b) yetyi swa batI ran-aan ch-a
where she(N) food(A,m,sg) cook-NPerf aux(f,sg)

Where she cooks food . . .

(59c) yodivay su Daak-as khat traav-yi
if he(N) mail(D) letter put-Fut

If he sends the letter in the mail . . .

The data in (57) to (59) show that in relative and adverbial clauses, unlike main or subordinate *ki*-clauses, the finite verb is found in the clause-final position. The verb-second order in these clauses could possibly be grammatical, but the clause will cease to be a relative clause. For example, if we take (57c) and move the verb to a position after the first constituent, presumably to M^0, we get a declarative clause reading; the relative clause reading is lost, as in (60a). Similar results obtain in adverbial clauses (60b); verb movement to clause-second position yields a declarative sentence, as in (60b)

(60a) yath gar-as manz ch-a swa
this(O) house(O) in aux(f,sg) she(N)

roozaan
live(NPerf)

It is in this house where she lives.
*The house in which she lives . . .

(60b) yetyi ch-a swa batI ran-aan
here aux(f,sg) she(N) food(A,m,sg) cook-NPerf

It is here that she cooks food.
*Where she cooks the food . . .

In headed relative clauses, V2 is unacceptable, as the data in (61) suggests.

(61) *swa kitaab [yos oosuk tsI raath
that book which was you yesterday

paraan]
read-NPerf

The book which you were reading yesterday . . .

The data in (60) and (61), then, suggest that in relative and adverbial clauses, verb movement to clause-second position (M^0) is disallowed. However, Kashmiri does allow movement of the finite verb (=verb

raising, cf. Kroch & Santorini 1991) in relative and subordinate adverbial clauses, but not to the highest functional projection (M^0).

In (62) below, we show that sometimes the auxiliary verb may precede the main verb in relative and adverbial clauses. Notice that the unacceptability of (62) increases as the finite verb moves further and further away from its cause-final position. Note that in (62d), where the finite verb is in the clause-second position, the sentence is ungrammatical.[27]

(62a)

yus	laRk	dohay	mehnat	kar-aan
which	boy(N)	daily	hard work	do-NPerf

ch-u
aux(m,sg)

The boy who works hard everyday . . .

(62b)

?yus laRk	dohay	mehnat	ch-u
which boy(N)	daily	hard work	aux(m,sg)

kar-aan
do-NPerf

The boy who, it is hard work that he does everyday . . .

(62c)

??yus laRk	dohay	ch-u	mehnat
which boy(N)	daily	aux(m,sg)	hard work

kar-aan
do-NPerf

The boy who, it is everyday that he woks hard . . .

[27] The declarative reading in (62d) is unavailable because the relative pronoun used is not homonymous with the demonstrative pronoun, thereby blocking the declarative reading.

(62d) *yus laRk ch-u dohay mehnat
which boy(N) aux(m,sg) daily hard work

kar-aan
do-NPerf

The boy who works hard every day . . .

Notice that the constituent immediately preceding the finite verb bears heavy (focal) stress. One reasonable account of this optional movement is to assume that the feature [+foc] is generated under the Infl [T^0] node. In V2 clauses, when the finite verb moves via head-to-head movement, it picks up the focus feature and moves it to M^0. The focused constituent of the sentence, therefore, must move to the local (minimal) domain, the Spec-MP, to satisfy feature-checking requirements. Something similar is happening in the case of optional movement in relative and adverbial clauses.[28] In (62b) and (62c), the constituent immediately preceding the finite verb gets the heavy stress generally associated with the focused constituents. This correlation of finite verb movement and focus interpretation in relative and adverbial clauses suggests a semantic-communicative function to single out the focus in a clause otherwise generally construed as old information, i.e., without any "communicative dynamism." The ungrammaticality of (62d) is presumably due to the fact that *wh*-words in relatives are topical, crucially not focus. It is presumably the case that in Kashmiri a constituent cannot be both topic and focus at the same time. The ungrammaticality of (62d), however, suggests that the landing site of this optional verb movement in relative and adverbial clauses cannot be

[28] In very short clauses like those with a subject and a main and auxiliary verb, V2 is disallowed, as shown by the grammaticality contrast in (i) and (ii) below.

(i) *yus laRk chu shongith
which boy is sleeping
The boy who is sleeping.

(ii) yus laRk shongith chu
which boy sleeping is
The boy who is sleeping.

the same as the (obligatory) verb movement in finite main clauses or in subordinate *ki*-clauses.[29]

4.2.2.2 Nonfinite Clauses

Nonfinite clauses are verb-final in Kashmiri as shown in (63)-(65). Notice that the infinitive shows gender (only) agreement. These (nonfinite) clauses have the same distribution as NPs: they have genitive (63a and 64a) or PRO subjects (65a), and they take postpositions (66a). I conclude that they are nominalized categories, namely gerunds.

(63a) me chu [tem-sund batI ran-u-n]
I(D) aux he-of food(m) cook(m)-Inf

khar-aan
dislike-NPerf

I don't like his cooking food.

(63b) *me chu [tem-sund ran-u-n batI]
I(D) aux he-of cook(m)-Inf food(m)

khar-aan
dislike-NPerf

I don't like his cooking food.

---

[29] If-clauses in Kashmiri behave also like relative and adverbial clauses, as discussed above in (62). Verb-second order in these clauses, however, is marginally acceptable if the preverbal constituent receives contrastive focus stress.

(i) agar tsI-yi parakh yath kamras manz telyi kyaa pharak peyi
If you-only study this room in then what difference fall-will
If you (not him/her) study in this room, then what difference will it make (to you).

(ii) *agar tsI parakh yath kamras manz telyi kyaa pharak peyi
If you study this room in then what difference fall-will
If you study in this room, then what difference will it make (to you).

(64a) me chI [tem-sanz kamiiz tshan-i-n]
I(D) aux(f) he-of shirt(f) wear(f)-Inf

khar-aan
dislike-NPerf

I hate wearing his shirts.

(64b) *me chI [tem-sanz tshan-i-n kamiiz]
I(D) aux(f) he-of wear(f)-Inf shirt(f)

khar-aan
dislike-NPerf

I hate wearing his shirts.

(65a) su ch-u [PRO me haar
he(N) aux(m,sg) I(D,m) money(N,f)

d-i-n] yetsh-aan
give(f)-Inf want-NPerf

He wants to give me money.

(65b) *su ch-u [PRO d-i-n me
he(N) aux(m,sg) give-Inf(f) I(D,m)

haar] yetsh-aan
money(N,f) want-NPerf

He wants to give me money.

(66c) *su ch-u [PRO me d-i-n haar]
he(N) aux(m,sg) I(D,m) give-Inf(f) money(N,f)

yetsh-aan
want-NPerf

He wants to give me money.

(66a) me chu [PRO tem-sind-is maal-is
I is he(O)-(G)-(D) father(D)

samkhan]-as dil karaan
meet-(D) heart do

I (really) wish (long) to meet with his father.

(66b) *me chu [PRO samkhan-as tem-sind-is
I is meet-(D) he(O)-(G)-(D)

dil maal-is] karaan
heart father(D) do

I (really) wish (long) to meet with his father. .

(66c) *me chu [PRO tem-sind-is samkhan-as
I is he(O)-(G)-(D) meet-(D)

dil maal-is] karaan
heart father(D) do

I (really) wish (long) to meet with his father. .

It is thus clear from the data in (63)-(66) that Kashmiri does not allow the nonfinite verb to move (finiteness referring to having the feature [+Tense]). These nonfinite clauses are gerunds, and thus it is possible for the *wh*-words to move out and get a wide scope reading, as in (67) (gerunds not being clausal projections (MP)).

(67) tsi kyaa$_i$ ch-uk yetsh-aan [t$_i$ kar-un]
you what is-2ms want-NPerf do-Inf

What is it that you want to do?

As a contrast to (67), I present data from finite clauses to show that in these clauses *wh*-movement is clause-bounded (see also (38) and (39) above). (68a) is not possible since Kashmiri finite complements are islands (cf. Chapter 3): they occur in adjunct positions, they are not L-marked, and therefore they are a Blocking Category and a barrier for movement. Movement of the *wh*-element to the matrix clause in (68a) is presumably a Subjacency violation. Additionally, (68b) shows that *wh*-movement is clause-bound. The only possible way to get a wide scope reading in finite complements is by using a pleonastic *wh* in the matrix clause, as shown in (68c).

(68a) *tse kyaa chay khabar ki tem t_i
you(D) what is know that he(E)

kor
did

What do you know he did?

(68b) tse chay khabar ki tem kyaa$_i$ kor t_i
you(D) is know that he(E) what did

You know what he did.

(68c) tse kyaa$_i$ chay khabar ki tem kyaa$_i$
you(D) what is know that he(E) what

kor
did

What do you know he did? [NOT: You know what he did.]

The only exception to the *wh*-extraction facts in (68) is with a small set of verbs known as bridge verbs. These bridge verbs are L-marked by the verb, and therefore, the clausal projections are not barriers to movement anymore, and hence the possibility of long distance movement arises — just in these cases, however.

(69) rameshas kyaa$_i$ chu baasaan ki
Ramesh(E) what is believe-NPerf that

me kor t_i
I(E) do-Perf

What does Ramesh believe (think) that I did?

4.3 SUMMARY

Summarizing the discussion so far, we have seen that in declarative main and subordinate *ki*-clauses, V2 is the norm, whereas in left-dislocated and interrogative constructions, V3 is the norm. Exceptions to these orders are also found: V1 orders are restricted to topicless Topic-Comment structures when the topic has already been established in the (prior) discourse; V-final order is the norm in relative clauses and

subordinate clauses and is found, without exception, in nonfinite clauses. Extraction out of finite complements is generally not allowed, with the exception being the complements of bridge verbs.

CHAPTER 5
MOTIVATING VERB MOVEMENT

5.0 INTRODUCTION

After detailing a descriptive sketch of Kashmiri V2, this chapter examines the category Comp and reveals two functions that are, cross-linguistically, associated with it: clause-type (Mood) and subordination marking. Under the assumption that mood (clause-type) marking is universally required, a parametric account of V2 is proposed that generalizes over all of Germanic and Kashmiri. The chapter, then, explores the favorable consequences of the proposed parameterized account of V2, providing, among other things, an account of why V2 is blocked in relative and subordinate adverbial clauses in Kashmiri. I begin by offering a critique of some influential accounts of V2, demonstrating their inadequacy in dealing with the Kashmiri data.

5.1 THE "STANDARD" ACCOUNT

Recall that the declarative main clauses in Germanic require the inflected verb to appear in the second position, but in the embedded clauses with an overt complementizer, the inflected verb does not occupy the clause-second position: it must remain in its base-generated position (cf. Haider & Prinzhorn 1986, Vikner 1991). The standard Germanic analysis of V2 (den Besten 1977, and work thereafter) assumes Comp to be the landing site for verb movement in the main clauses. This generalization is based on the similarities in the distributional properties of complementizers and finite verbs, all of which strongly suggest that there is one position in which either the complementizer or the finite verb appears. Let us look at some generalizations below.

First, both the finite verb and complementizer occupy the position to the left of the subject as shown by the German data (taken from Vikner 1991) in (1).[1]

---

[1] It has been pointed out in the Germanic literature that embedded V2 is possible ONLY when the embedded clause is a complement of a "bridge verb" like *say*. Thus embedded V2 in German is restricted to only a subset of sentential complement-taking verbs. In Kashmiri, embedded V2 is not restricted in this sense, i.e., selection by the main clause verbs. Some Germanic langusges, e.g., Frisian and Swedish, do allow V2 optionally with overt Comps. In Danish, embedded V2 is possible only with overt Comp.

(1a) Er sagt **daß** die Kinder das Brot gegessen
He says that the children the bread eaten

haben
have

He says that the children have eaten the bread.

(1b) Er sagt das Brot **haben** die Kinder
He says the bread have the children

gegessen
eaten.

He says (that) the children have eaten the bread.

Second, verb movement and the presence of lexical complementizers are always in complementary distribution, as the Danish data (taken from Weerman 1989) in (2) suggests. V2 is possible in main clauses (2a); V2 is not possible when there is an overt complementizer, as shown by the grammaticality contrast in (2b) and (2c). In (2b) there is no verb movement in the presence of the overt complementizer — the verb stays in its base position following the negative adverb. In (2c), however, the verb moves to a position after the subject, superficially similar to (2a), rendering it ungrammatical.

(2a) manden **har ikke** set en bog
the man has not seen a book

The man has not seen a book.

(2b) jeg mener **at** manden **ikke har** set en bog
I believe that the man not has seen a book

I believe that the man has not seen a book.

(2c) *jeg mener **at** manden **har ikke** set
I believe that the man has not seen

en bog
a book

I believe that the man has not seen a book.

Third, there is a crucial adjacency requirement between the finite verb and pronominal subjects in main clauses and complementizers and pronominal subjects in subordinate contexts as shown in (3) and (4), respectively, for Swedish (Platzack (1986a, b)). Platzack (1986b) concludes that the finite verbs and complementizers must be in a position (Comp) which is adjacent to Spec-IP.

(3a) **Har** verkligen **Kalle** gjort det har
Has really Kalle done this

Has Kalle really done this?

(3b) ***Har** verkligen **han** gjort det har
Has really he done this

Has he really done this?

(3c) **Har** **han** verkligen gjort det har
Has he really done this

Has he really done this?

(4a) .... **att** verkligen **Kalle** gjort det har
that really Kalle done this

.... that Kalle really did this.

(4b) *....**att** verkligen **han** gjort det har
that really he done this

.... that he really did this.

(4c) ....**att** **han** verkligen gjort det har
that he really done this

... that he really did this.

Similar conclusions are reached by Weerman (1989) based on his data from Modern Dutch (5), where it is claimed — originally due to den Besten (1983) — that while the question words precede finite verbs in main clauses and complementizers in embedded clauses, subject clitics immediately follow them.

(5a) wanneer heeft-**ie** een boek gezien
when has-he a book seen

When has he seen a book?

(5b) wanneer of-**ie** een boek gezien heeft
when whether-he a book seen has

(I don't know) when he has seen a book.

Thus there is overwhelming evidence in Germanic to suggest that the position of finite verbs is the same as the position of the complementizer. This hypothesis allows the root-subordinate asymmetry in German, Dutch, Swedish, Norwegian, etc., to follow rather systematically: the landing site of V2 is Comp which, given the extended X-bar theory of Chomsky (1986b), is the "natural" second position of the clause. In embedded clauses where the Comp position is taken up by a lexical complementizer, V2 is blocked. I call languages exhibiting root-subordinate asymmetry with respect to the position of finite verb in main and subordinate clause **A-V2 languages.**[2] In A-V2 languages, the main clause structure is derived as a result of two applications of Move-α: one application moves the inflected verb to Comp and the other application moves a constituent to the Spec of Comp, which in Germanic is the topic position.[3] The structure for main and subordinate clauses is given in (6a) and (6b), respectively.

[2] A-V2 languages, those that show an asymmetry with respect to the movement of the finite verb depending on the presence or absence of an overt complementizer, contrast with S-V2 languages, discussed next in section 5.2, where the finite verb moves both in the matrix clauses as well as in the subordinate clauses introduced by an overt complementizer. Thus "symmetrical" V2 (S-V2) languages are not only V2 in matrix clauses, but in all types of subordinate clauses as well.

[3] The V2 data that I have surveyed has left the issue of "topicalization" unmotivated. The only paper that peripherally addresses this issue is Santorini (1990) who extends Fukui's (1986) set of F-features to include a feature "[topic]" which she assumes will be assigned by Infl. The saturation of the [Topic] feature forces topicalization.

(6a)

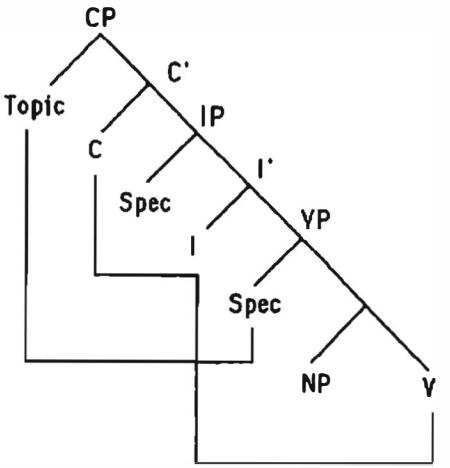

(6b)

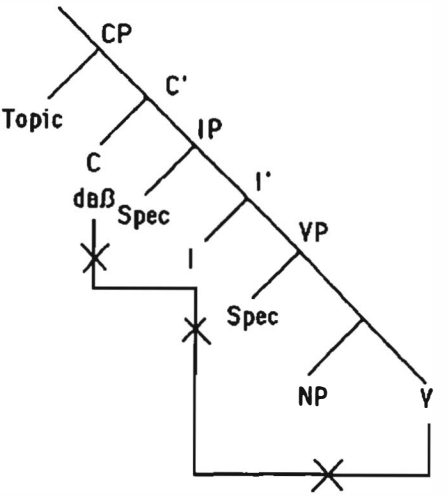

With respect to the V2 order, however, there are two Germanic languages that do not display the same distribution as noted above.

These two languages are Icelandic (Thráinsson 1986, Rognvaldsson & Thráinsson 1990, Vikner 1991) and Yiddish (Santorini 1989, 1994, Diesing 1988, 1990). These languages, known as **S-V2** languages, allow the movement of the finite verb in both matrix clauses as well as in subordinate clauses introduced by overt complementizers. I turn to these languages next for some comparisons with Kashmiri and to explore if the analyses offered to account for V2 in these languages can be extended to explain V2 in Kashmiri.

5.2 YIDDISH AND ICELANDIC

It has been observed that within the Germanic family, Yiddish (Diesing 1988, 1990, Santorini 1989, 1994) and Icelandic (Thráinsson 1986, 1994) do not show the familiar root-nonroot asymmetry: root clauses do not differ in word order from the corresponding subordinate clauses regardless of the presence or absence of a lexical complementizer. Clearly these languages are different from German-type V2 languages that have a variable position for the finite verb depending upon whether the clause in question is the root clause or the subordinate clause. Earlier, we observed Kashmiri to be a language in which V2 was available in both main and some subordinate contexts. The standard V2 account (= verb movement to Comp, recall from section 5.1) seems to leave little room for variation found in V2 across languages, unless some V2 is effected by movement to a different position. Yiddish and Icelandic (and Kashmiri, recall from chapter 4) seem to point in that direction. In these languages, verb movement seems to be the main rule in both main and subordinate clauses (see 7, 8, and 9 below).

Yiddish (adapted from Diesing 1990:41,42)

(7a) Ikh **shik** avek dos bukh
I send away the book

I send away the book.

(7b) Avrom goyt **az** Ikh **shik** avek
Avrom believes that I send away

dos bukh
the book

Avrom believes that I send away the book.

(7c) *Avrom goyt **az** Ikh avek **shik**
Avrom believes that I away send

dos bukh
the book

Avrom believes that I send away the book.

Icelandic (from Thráinsson 1986: 171)

(8a) Helgi **hefur** trulega keypt bokina
Helgi has probably bought the book

Helgi has probably bought the book.

(8b) Jon segir **að** Helgi **hefur** trulega
John says that Helgi has probably

keypt bokina
bought the book

John says that Helgi has probably bought the book.

(8c) *Jon segir **að** Helgi trulega **hefur** keypt
John says that Helgi probably has bought

bokina
the book

John says that Helgi has probably bought the book.

Kashmiri

(9a) akhbaar **por** laRkan raath
newspaper read boy yesterday

It was the newspaper that the boy read yesterday.

(9b) me buuz **ki** akhbaar **por** raath
I heard that newspaper read yesterday

laRkan
boy

I heard that it was the newspaper that the boy read yesterday.

(9c) *me buuz **ki** laRkan raath
I heard that boy yesterday

akhbaar **por**
newspaper read

I heard that the boy read the newspaper yesterday.

A straightforward account of V2 in Yiddish and Icelandic has been proposed by Diesing (1990), Santorini (1989), and Thráinsson (1986), all of whom, implicitly or explicitly and with little variation, make the following assumptions:

(10a) The landing site for the finite verb is **not** Comp
(10b) Main clauses do not have a **Comp** projection in these languages, i.e., main clauses are IPs and subordinate clauses are CPs.

In addition to the proposals that are guided by the assumptions in (10), there are two other relatively recent proposals that depart from the assumptions in (10): those of Weerman (1989) and Vikner (1991). Let us look at the proposals more closely to explore their adequacy in accounting for the empirical generalizations of Kashmiri V2 noted in the previous chapter.

5.2.1 Diesing (1990)

Diesing, adopting the VP-internal subject hypothesis (Fukui & Speas 1986, Kitagawa 1986, Koopman & Sportiche 1988) argues that in Yiddish, V2 is achieved by V-movement to Infl rather than to Comp. That is why in embedded clauses V2 is possible even in the presence of the complementizer *az* 'that' as shown in (11).

(11) Avrom gloybt **az** Max **shikt** avek
Avrom believes that Max sends away

dos bukh
the book

Avrom believes that Max sent the book away.

Diesing proposes that Infl is able to assign nominative Case rightward, which accounts for the fact that subjects can remain in their base-generated positions while any nonsubject can occupy the topic position, Spec-IP. As this position is usually assumed to be the position of subjects, she proposes that Yiddish allows Spec-IP to function either as an A or an A-bar position. She holds the ECP responsible for the obligatory filling of the Spec of IP position: complementizers in Yiddish are not lexical governors, thus empty topics are ruled out as ECP violations.

Because Infl is free for the verb to move into even in embedded clauses, one gets the desired result, V2. This is illustrated schematically below:

(12)

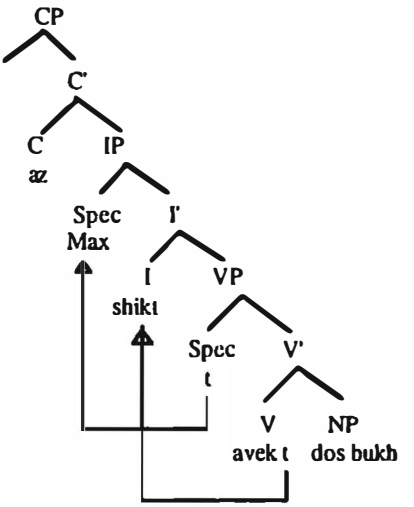

Additional evidence for such a structure is said to be provided by embedded questions which allow both the Spec of CP and the Spec of IP to be filled, giving the appearance of V3 order.[4]

(13) Ikh veys nit [$_{CP}$**vuhin** **ir** geyt]
I know not where you go

I don't know where you go.

(14) ***Vuhin** **ir** geyt?
where you go

Where did you go?

Although Diesing takes the facts in (11) to (14) to be evidence for an analysis of Yiddish V2 as movement to Infl, there are certain questions that her analysis is unable to address. First, with respect to the structure of V2 clauses, her analysis depends on the assumption that in matrix clauses, there **must not** be any Comp or the projection of Comp. She shows that with a CP, the facts of Yiddish will not receive an account because if matrix clauses had CPs, one would wrongly predict that Topics and *wh's* could co-occur in direct questions and that V3 order will be found.

However, this begs the question why Yiddish matrix clauses **cannot** have a CP projection, especially in view of the fact that German V2 clauses **must** have a CP, if the standard account has any truth in it (Haider & Prinzhorn 1986, Vikner 1991). She proposes (1990:55) what might appear to be the principle banning the projection of CP in Yiddish main clauses which stipulates that only the minimal amount of A-bar structure should be generated. She claims that this guarantees that a CP will not be generated in matrix clauses in Yiddish.

The problem with this stipulation is that it is rather vague. For example, under one interpretation of this principle, main clauses should have both CP and IP if there is both a Topic and a *wh*-element because the minimal amount of A-bar structure needed in this case appears for both the Spec of IP and of CP.

One might try to circumvent the generation of Spec of both categories by stipulating that Yiddish main clauses can have **at most one** A-bar position, but this appears very *ad hoc* given the reported possibility of having both *wh* and Topic in indirect questions.

---

4. Although subject-initial indirect questions in Yiddish are acceptable, the status of nonsubject-initial indirect questions is controversial (cf. Travis 1984, Lowenstamm 1977, and Diesing 1990).

Also, given Diesing's claim that the Spec of I P may be an A-position when the subject occupies it, the one A-bar Spec restriction should still allow the Spec of CP—the "minimally necessary A-bar position"—to be generated in such a case yielding V3 order. However, we know this is not the case.

5.2.2 Weerman (1989)[5]

One of the goals that Weerman sets for himself is a unified account of V2 (at least in Germanic, since he does not consider non-Germanic V2 languages). Thus, the asymmetric A-V2 vs. symmetric S-V2[6] contrast is one of the problems that he tackles head-on by extending the binding theory of Chomsky (1981) to clauses. In the LGB framework, anaphors must be locally bound, pronominals must be locally unbound, and R expressions must not be bound. Accordingly, by analogy to this nominal paradigm Weerman argues that the lexicalization of the complementizer position determines the status of the clause with respect to its binding properties. Clauses with verbal complementizers are analyzed as referential R expressions because they have an independent reference to an illocutionary expression. For example, the embedded clause in (15) is an R expression because it is not bound by the illocutionary role of the matrix clause (antecedent): it has an illocution of its own — a question.

(15) Henk vraagt: geeft Jan Marie een kado
Henk asks gives Jan Marie a book

Henk asks: Is Jan giving Mary a present?

When a complementizer appears in C, the clause is analyzed as either anaphoric or pronominal, depending on the structural configuration. Embedded clauses of the type introduced by the ordinary *dat* with finite verb-final order, as in (16) below, are analyzed as anaphoric because they refer to (=depend on) the matrix illocution. The node E in (16) refers to the governing category of the verbal specification (of the

[5] For an informed review of Weerman, see Haider (1991).

[6] A-V2 refers to those cases, like German, where there is,with respect to the position of the finite verb, an apparent asymmetry between root and subordinate clauses. S-V2 refers to cases like finite verb movement in Icelandic/Yiddish/Kashmiri where the finite verb moves in both main and subordinate clauses. His basic insight concerning the two S-V2 Germanic languages - Yiddish and Icelandic - is that these are very much like Modern English which has lost productive V2 altogether. Therefore, his theory of V2 in the main, caters directly to the A-V2 languages.

binding theory). The anaphoric account in (16) is predicted by the fact that both the matrix and embedded verbal projection bear the same index and are contained within a single governing category E.

(16) (adopted from Weerman 1989: 95)

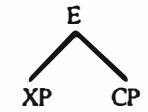

Jan zegt dat hij Marie een boek zou geven
J says that he Mary a book would give
Jan says that he would give a book to Mary.

An embedded clause with a complementizer in C is analyzed as pronominal if the clause refers to an independent illocutionary expression, but this illocution agrees with the illocution of the matrix clause. The relevant example and the structure licensing pronominal reference is given in (17). The verbal projections contained in CP1 and CP2 can have the same indexes, but they are separated by an E-node. Hence, the pronominal is free in its governing category.

(17) (adopted from Weerman 1989: 95)

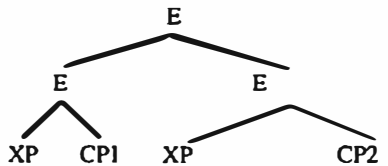

Jan zegt ik geef Marie een kado
Jan says I give Mary a present

Weerman's (1989) basic proposal is this: UG allows only two, and not three, verbal positions in a clause, C and V. All root clauses are "referential," and in referential clauses, the verb needs to be "S-identified" (= licensed) verbally. Here 'S' refers to the properties associated with S-Structure (e.g., Case Theory). The S-identifier of V is the Comp. Since the claim is that S-identifiers must be lexical at PF (1989:79), this means, therefore, that C has to be verbal in root clauses. V-to-C, which gives rise to V2, is a means of achieving such verbal S-identification.[7] Embedded clauses are non-referential (pronominal or anaphoric) in the typology of his "verbal" Binding

[7]A non-V2 language like English achieves the identification of V "inherently" by structural means.

Theory, and in such clauses the identifier of the V must be non-verbal, i.e., a lexical complementizer.

Further, he notes that S-V2 languages seem to have a third verbal position between the C and the base V position. The most likely candidate for this position is Infl, but since he wants to eliminate the Infl node from clause structure universally, Weerman cannot bring it back just for the S-V2 languages. Therefore, he claims that the third verbal position in these languages arises due to the fact that certain elements, such as negation, act as **blockades**, blocking the percolation of the finiteness feature from the V to S (which is Vmax in his system). In an English sentence like (18), a dummy auxiliary bearing the finiteness feature of the main verb is inserted above the blockade (above elements such as *not*) in order to make the projection of the finiteness feature to Vmax available.

(18)

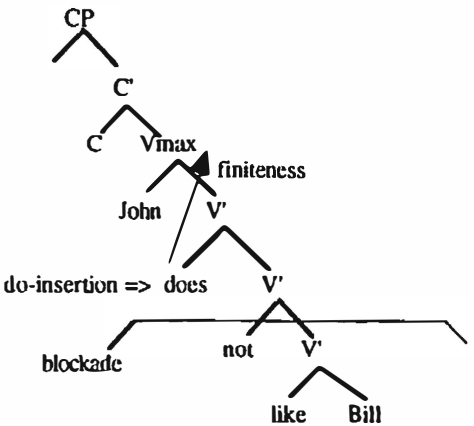

Weerman takes this account for English and extends it to Yiddish and Icelandic (1989: 106). According to Weerman, the relevant difference between English and these languages is that whereas English prohibits lexical verbs (theta-assigning verbs, cf. Pollock 1989, Chomsky 1989) from moving over the blockade, Yiddish and Icelandic allow it. Therefore, even in the presence of a lexical Comp, the finite verb appears to be in second position, having moved over the blockade. In root clauses, the movement of the verb is to C (via Aux, if there is a blockade), as in German, because C must be verbal.

To summarize, in Weerman's account, S-V2 in root clauses is V-to-(Aux)-to-C, whereas in embedded clauses, it is V-to-Aux.[8] Although his account is flexible enough to extend from A-V2 to S-V2, the success of his account for S-V2 languages rests heavily on his "blockade theory."

A problem with this theory is that whereas English provides some evidence that elements such as Neg block verb movement — in the form of the Do-Insertion rule and non-inflecting modals — Yiddish and German are exactly alike in relevant respects which makes an independent confirmation of the theory difficult.

A technical difficulty with his proposal is that because the Aux position is simply the adjoined position above the blockade, it is difficult to guarantee that it will be the second position in the S since the intervention of adverbials could turn it into a third or fourth position. To guarantee that it will be second, one must treat all these elements as "blockades," forcing the verb to move over them. This does not seem to be a highly motivated move.

Finally, there are empirical and theoretical problems with his formulation of the verbal specification of Binding Theory, summarized below:

(19) <u>Verbal Specification of Binding Theory</u>:

a. If the S-identifier is a complementizer, the V-projection is anaphoric or pronominal, depending on the structural configuration.

b. If the S-identifier is verbal, the V-projection is an R-expression.

Taken as a universal claim, his theory predicts that, universally, subordinate clauses should never employ verbal mood identification. However, the facts of Korean discussed at the outset challenge this claim. In addition, this does not work even for A-V2 languages like German, Dutch, and Swedish. In these languages, V2 is possible in embedded complements of certain Assertive predicates. This

---

[8] Since the publication of Weerman (1989), Weerman has changed his position on S-V2 (personal communication). He now assumes that all matrix V2 is derived by verb movement to Comp via Infl. For embedded S-V2, Weerman adopts Vikner's CP-recursion hypothesis. The finite verb moves to the lower Comp, which gives it an independent ('R' expression) interpretation. However, this interpretation is overruled by the highest CP lexicalized by a complementizer. The CP-recursion assumed for embedded S-V2 is problematic, however. In the next section, 5.2.3, I present a critique of it.

phenomenon, dubbed *erlebte rede*, is illustrated in the Dutch example (20) below:[9]

(20) Jan zegt (*dat) hij **zou** Marie een kado geven
Jan said that he would Marie a present give

Jan said that he would give a present to Marie.

The difference between these and normal subordinate clauses is two-fold: lexical complementizers are not allowed and V2 is exceptionally allowed.

Weerman analyzes these clauses as "pronominal." Notice however, that the S-identification is verbal (since it is achieved by V-to-C). The final formulation of his principles are qualified to make room for such clauses.

(19') Verbal Specification of Binding Theory:

a. If the S-identifier is a complementizer, the V-projection is anaphoric or pronominal, depending on the structural configuration.

b. If the S-identifier is verbal, the V-projection is an R-expression **(although under certain circumstances, pronominal behavior is possible)**.

Because of this qualifying clause, no real prediction can be made about the root-subordinate asymmetry of V2 except as a statistical tendency, for it becomes only a **tendency** that root clauses should have verbal identification while subordinate clauses should not.[10]

As we shall see in section 5.3, we make no such demands about mood-marking. The hypothesis forwarded there is that there are various ways of making mood distinctions overt, and none of these strategies are inherently tied to matrix or subordinate contexts.

---

[9] In Swedish the complementizer *att* 'that' is obligatory; however, V2 is still possible as shown in (i) below (from Platzack 1986:46):

(i) Han sa att Erik hade verkligen blivit fet
he said that Erik had really grown fat
He said that Erik had really grown fat.

[10] However, there are various elements of his overall approach which find a direct counterpart in our analysis, which was developed independently of his work.

5.2.3 Vikner (1991)

Vikner's account of V2 in Germanic assumes that the finite verb moves to Comp immediately following a topic (some XP) that has been fronted to Spec-CP. In the case of embedded V2 in Yiddish and Icelandic, Vikner entertains three hypotheses, given below in (21), and finally picks up the CP-recursion analysis (21a) by the process of elimination (of the other two approaches). In the CP-recursion analysis, the two CPs (and two C^0s) are inside each other: the higher C^0 contains the complementizer, the lower one contains the finite verb.

(21a) The CP-recursion analysis.

C^0	CP-Spec	C^0	IP-Spec		
...-that—	subject	— finite verb —		—	adverbial ...
...-that—	topic	— finite verb —	subject	—	adverbial ...

(21b) The ZP analysis.

C^0	ZP-Spec	Z^0	IP-Spec		
...-that—	subject	—finite verb		—	adverbial ...
...-that—	topic	—finite verb—	subject	—	adverbial ...

(21c) The topicalization to IP-Spec analysis.

C^0	IP-Spec	I^0	TP-/VP-Spec		
...-that—	subject	—finite verb		—	adverbial ...
...-that—	topic	—finite verb	—subject	—	adverbial ...

In assuming all V2 to be an instance of verb movement to Comp, Vikner adopts the CP-recursion analysis to account for the embedded V2 in Icelandic and Yiddish. His conclusions are based on data on the position of the medial adverb and Case and agreement facts. CP-recursion, however, was proposed to account for topicalization in complements of bridge verbs (Rizzi & Roberts 1989), such as in (22).

(22a) I believe that only after 8 p.m. could you get a space here.

(22b) Bill says that Shiela, John doesn't like.

Similar effects are indeed found in German. More precisely, V2 in embedded clauses is possible only with bridge verbs, e.g., *know, say,*

think. In (23) below, I give an example of embedded V2 in German (adapted from Vikner 1991).

(23a) Er sagt daß die Kinder diesen film gesehen
He says that the children this film seen

haben
have

He says that the children have seen this film.

(23b) Er sagt die Kinder haben diesen film gesehen
He says the children have this film seen

He says (that) the children have seen this film.

(23c) *Er sagt daß die Kinder haben diesen film
He says that the children have this film

gesehen
seen

He says that the children have seen this film.

Under the CP-recursion hypothesis, the following is the structure of (23b).

(24) Er sagt [$_{CP}$ Ø [$_{CP}$ die Kinder [$_{C'}$ haben [diesen film gesehen]]]]

Generalizing this structure to cases of S-V2 (Icelandic, Yiddish), as Vikner does, we miss the generalization that CP-recursion is not a structure invented to provide an account of V2, but rather it is possible in just those contexts where the verb can govern the embedded CP (cf. Iatridou & Kroch 1993, Authier 1992). Authier (1992) and Iatridou and Kroch (1993) have argued that CP-recursion is possible only when the embedded clause is governed by a local L-marking verb. The logic of the argument is that in the CP-recursion structures, the upper complementizer and its associated CP projection is deleteable at LF because it has no semantic content. This LF-deletion process of the semantically vacuous C^0 (and CP) allows the matrix verb to govern into (and license) the lower CP in the standard way. Government by the verb voids the barrierhood of this CP for extraction. However, because negative verbs and negated bridge verbs select a

complementizer that has semantic content (cf. Laka 1990, Reinholtz 1993, Iatridou & Kroch 1993), its CP cannot be deleted at LF.

The empirical facts in Kashmiri confirm Iatridou and Kroch's 1993 hypothesis on CP-recursion licensing: it is possible only under CPs that are governed by a verb. In Kashmiri, complements of negative verbs and negated bridge verbs behave differently from non-negated bridge verbs with respect to argument extraction out of them. It is possible to *wh*-extract out of a complement of a non-negated bridge verb but not out of that of a negative verb or a negated bridge verb. This contrast is shown below.[11]

(25a) tse kya baasoyi ki tem aasyi ron-mut
you what thought that she has cook-perf

What did you think she cooked?

(25b) *tse kya baasoyi-na ki tem aasyi ron-mut
you what thought-Neg that she has cook-perf

What don't you think she cooked?

The grammaticality contrast between (25a) and (25b) follows from the assumption that the CP-recursion structure is available only in non-negated bridge verbs because in these contexts LF-deletion of upper C^0/CP will allow the matrix verb to govern the lower C^0. If, as Vikner assumes, embedded V2 is due to CP-recursion, then complements of negative and negated verbs should not license V2 as no CP-recursion structure is available. However, this prediction is not borne out, as the grammaticality of the data in (26) suggests.

(26a) tem-is chu shakh ki pagah
he(D) aux doubt that tomorrow

hyak-na ba subhaayi vathith
able-Neg I(N) early rise-CP

He doubts the fact that tomorrow (of all the days), I will be able to wake up early.

[11] Later I present more evidence to show that negative and negated bridge verbs behave differently than non-negated bridge verbs with respect to argument extraction out of their complements.

(26b) tem-is chu afsoos ki yi kitaab cha-yi tse
he(D) aux regret that this book aux you(E)

par-mets
read-Perf

He regrets the fact that it is this book that you have read.

(26c) me cha pareshaanii [kyaazyiki shiila cha-na
I is worry because Sheila is-Neg

rameshan vuchmats]
Ramesh(E) seen

I am worried because Ramesh has not seen Sheila.

(26d) rameshan dopnam-na ki pagah vathyi
Ramesh(E) said-Neg that tomorrow wake

shiila sulii
Sheila early

Ramesh did not say that Sheila will get up early tomorrow.

Further, if we assume generalized CP-recursion for Kashmiri, Icelandic, and Yiddish, extraction should not be possible from such clauses since these clauses are syntactic islands, and extraction out of such clauses will involve crossing too many bounding nodes. In Kashmiri, as noted in the earlier chapter, *wh*-extraction is restricted to only those complements that are governed by a bridge verb, as the contrast in (27) suggests.

(27a) rameshas kyaa$_i$ chu baasaan ki me
Ramesh(E) what is believe-NPerf that I(E)

kor t_i
do-Perf

What does Ramesh believe (think) that I did?

(27b) *tem-is kyaa$_i$ chu afsoos ki tse cha-yi t_i
he(D) what is regret that you(E) aux

par-mets
read-Perf

What does he regret that you have read.

In assuming generalized CP-recursion to account for embedded V2 in Kashmiri, we will not have an account for the grammaticality contrast in (27). In Yiddish too, as Diesing (1990:62) notes, extraction from embedded non-subject topicalized clauses is possible (28), an unexpected result in a generalized CP-recursion account.

(28) Vemen hot er nit gevolt az ot di
who(D) has he not wanted that PRT the

bikher zoln mir gebn?
books should we give

To whom did he not want us to give the books?

Further, in his proposal (21a) earlier, Vikner argues that Spec-IP is the position reserved for nominative Case assignment under government from C^0.[12] However, quirky subjects in Kashmiri and Icelandic (see (29a) and (29b) respectively) occupy the canonical subject position — Spec-IP in the structure (21a). The data in (29) thus pose serious empirical problem for Vikner's generalized CP-recursion account.

(29a) tem dop ki az gas laRk-as$_i$
he said that today need(f,sg) boy(D)

panin$_i$ kitaab
self's book(N,f, sg)

He said that the boy wants his (own) book today.

[12] He argues that since IP-Spec is a Case position it cannot be host to topicalization operation (contra Diesing 1990): topicalization must be an operation that moves a constituent to CP-Spec. For more arguments for the dual nature of Spec IP in Yiddish, i.e, A and A-bar, see Santorini (1994: 87-106).

(29b) Straknum lika slikir bilar
the boy(D) likes(N) such cars(N)

The boy likes such cars.

5.3 MOTIVATING VERB-SECOND

The V2 phenomenon discussed above shows the root-subordinate asymmetry in certain (most Germanic) languages, whereas other languages (Icelandic, Yiddish, Kashmiri) allow it in both main and subordinate clauses. As noted earlier for German, V2 accounts derive root-subordinate asymmetry by taking the landing site of V2 to be the Comp, which is taken up by the lexical complementizer in embedded clauses, hence, blocking V2. The S-V2 accounts take verb movement to Infl to account for V2 in both main and subordinate clauses. None of the proposals in the literature on V2 could satisfactorily account for both A-V2 and S-V2.

In this section, I propose, following mainly Bhatt and Yoon (1991), a parametric account of the V2 phenomenon that generalizes over Germanic and Kashmiri. This is done in the following manner: first, a theory of complementizers is developed based on evidence from languages with a richly developed complementizer system; second, the results of this analysis are then used to provide a parametric theory of V2; that is, a theory that accounts for both A-V2 and S-V2 languages in a principled way; finally, some favorable consequences of the proposed analysis are explored.

5.3.1 The Composition of Comp

The category complementizer has been firmly established among the stock of syntactic categories since the influential work of Bresnan (1972). Its utility has been greatly enhanced recently with the proposal of Generalized X-bar Theory of Chomsky (1986) which gives it a full-fledged two-level projection on a par with lexical categories. We begin our query into the complementizer system of natural languages by noting that complementizer is not a unified category, neither functionally nor structurally.

Crosslinguistically, one function of lexemes we call complementizers is to indicate clause type. For this reason, different matrix predicates select different kinds of complementizers. Comp, or the Spec of Comp, has in recent years also played a role as the landing site for certain kinds of operator movement, a fact also tied to clause type. In

this sense, all types of clauses, including matrix clauses, should possess a Comp node.

However, one difference between root and subordinate clauses is that root clauses do not admit **lexical** complementizers. This is doubtless due to the fact that lexical complementizers in languages like English also function as markers of subordination, wherefore the traditional designation is "subordinating conjunction." In English, then, these two functions are merged and lexicalized as a single lexeme.

However, in other languages with robust agglutinative morphology, these two functions are carried out by **separate** lexemes. This is most clearly the case in Korean and Japanese. Korean possesses a system of lexemes called **Mood Markers**. Mood marking is obligatory in all clauses, root and subordinate. However, to indicate subordination, it uses a subordinating particle, *-ko*, as seen in (30). This is the particle that has been analyzed as Comp in the generative literature of Korean, but it is easy to see that it functions quite differently from lexical complementizers in a language like English. The function of *-ko* is simply to indicate (verbal) subordination. This is demonstrated most clearly by the fact that it is compatible with a variety of mood markers. In other words, the **selection** requirement of the matrix V is satisfied by the mood markers, and not by *-ko*.

(30a) John-i wa-ss-**ta**
John(N) come-Pst-DECL

John came.

(30b) Bill-un [John-i wa-ss-**ta-ko**]
Bill-TOP John(N) thinks

sayngkakhanta
come-Pst-DECL-SUB

Bill thinks that John came.

(30c) John-i wa-ss-**ni**?
John(N) come-Pst-INTER

Did John come?

(30d) Bill-un [John-i wa-ss-**nya-ko**]
Bill-TOP John(N) come-Pst-INTER-SUB

mwulessta
asked

Bill asked if John came.

The facts of Korean complementizers quite convincingly prove the earlier conjecture that the English Comp conflates two distinct categories of information, whereas Korean, with its characteristic agglutinative morphology, separates them out and assigns them to different lexemes. Kashmiri (31) and Japanese (32) also show such an overt dissociation of the two functions of Comp.

(31a) ba khyam-**haa** batI
I eat-Subj rice

I would like to eat food.

(31b) tem dop **ki** su kheyi-**hee**-na yi
he said SUB he eat-Subj-Neg this

He said that he would not eat it.

(31c) Bill-an prutsh maajI **ki** swa heky-**aa**
Bill(E) asked mother SUB she can-Q

az yith
today came

Bill asked (his) mother if she can come today.

(32a) John-ga ki-ta
John(N) come-Pst

John came.

(32b) Bill-wa [John-ga ki-ta **to**] omotta
Bill-TOP John(N) come-Pst SUB thought

Bill thought that John came.

(32c) John-ga kita-**ka**
John(N) came-Pst-Q

Did John come?

(32d) Bill-wa [John-ga kita-**ka to**] tazuneta
Bill-TOP John(N) come-Pst-Q SUB] asked

Bill asked if John came.

Given these facts, I hypothesize, following the recent logic of giving each functional feature its separate projection (Pollock 1989, Chomsky 1991) and the usual assumptions about the uniformity of the language faculty, that the category Comp should be disassociated into a category that indicates clause-type, or **Mood** and, for subordinate clauses, a category of **Subordinators**. The lexical complementizer system of English conflates (or lexicalizes) the two categories, while in Korean, they are kept apart. With this background we proceed to propose an account of V2, which generalizes over A- and S-V2.

5.3.2 A Parametric Theory of V2

In order to begin our query for a parametric theory of V2, let us make the plausible assumption that clause-type, or mood marking is required universally in all clauses. However, languages may **differ** in the way in which these distinctions are marked.[13]

The methodologically sound way of approaching the question of the ways in which mood can be marked is again to look at a language that offers overt morphosyntatic clues. We have seen that this is the situation with Korean; Korean possesses separate lexical categories of mood markers. These are, morphologically, **verbal affixes**. Because on the surface they are suffixed to the verbal stem, it can be hypothesized that verb movement to Mood takes place obligatorily, in a manner as shown in (33).

(33) John-i wa-ss-ta
John(N) come-Pst-DECL

John came.

[13] This is similar to Weerman's idea that the "S-identification" of verbs may take various forms.

(34)

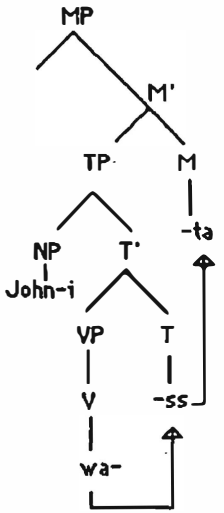

It is reasonable to assume that the verbal nature of these mood markers, reflected in their morphological status, triggers verb movement and that verb movement to Mood will make the mood marking visible for the clause as a whole.

I propose that something very similar is going on with V2 clauses. The sole difference between V2 languages and Korean is that while there is an affixal mood morpheme overtly present to attract the verb in Korean, the (verbal) mood in V2 languages (at least the Germanic languages — Kashmiri has overt mood markers that are, of course, verbal affixes) is empty. However, it attracts the verb for the same reason that the affixal mood morphemes in Korean do —to make mood marking visible (cf. Weerman 1989)

This provides an immediate answer to a fundamental question for any V-raising account of V2; namely, why the impossibility of V2 in the presence of lexical Comps in the A-V2 languages does not lead to ungrammaticality.[14] It is because the function performed by V2 is fulfilled by the lexical complementizer that also indicates mood (clause-type) distinctions. It also answers the question of why the movement of a verb can fulfill this function — mood is verbal.

[14] Weerman provides an answer to this question by claiming that lexical complementizers may also function as S-identifiers of verbs.

Given this, we must recognize in UG at least two general ways in which mood marking for clauses can be made visible —verbal and non-verbal. Korean and V2 clauses employ verbal mood identification, whereas languages like Chinese, with separate mood particles (such as the question particle *'ma'*) and non-V2 clauses headed by lexical complementizers choose nonverbal means of mood identification.

5.3.3 Subordinators and Complementizers

With this background, let me now put forth the hypothesis that the lexical complementizer of V2 languages may either be pure **Subordinators** or may indicate **both** the clause type/mood **and** subordinate status. I reserve the term complementizer to refer to the latter category. Distinct from this newly defined category of Comp, I will also recognize lexemes whose sole function is mood-marking, Mood.

In the former languages, the structure of embedded clauses will be as in (35a),[15] and in the latter, it will be as in (35b).

(35a) **S-V2**

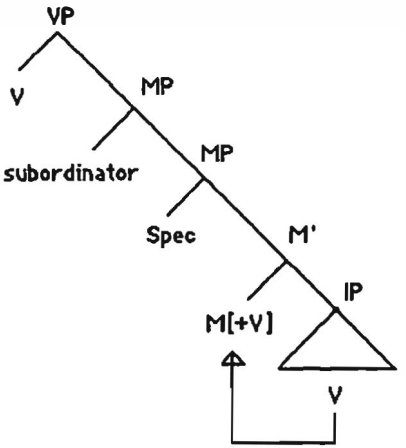

(35b) **A-V2**

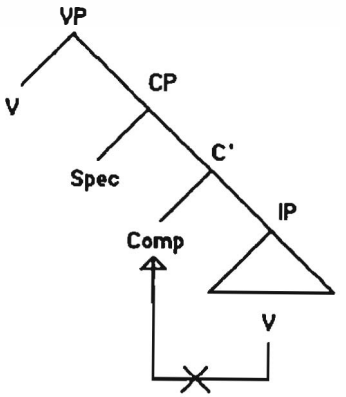

From this, it follows that if a V2 language has Comps, V2 will be prohibited in subordinate clauses because there is no available landing

[15] The adjunction of the subordinator to MP is an (apparent) violation of Baltin's (1982:2) "Like-Attracts-Like Constraint". One way to get around this problem is to allow "pure" subordinators ("semantically vacuous" complementizers, à la Iatridou and Kroch 1992) to project Specless CP.

site (Mood) for the verb. On the other hand, if the V2 language has a subordinator and Mood, V2 is still **possible** (to Mood) and **required** in subordinate clauses because otherwise there would be no way of determining the clause type (I am assuming with Weerman that mood-marking must be PF-visible, i.e., overtly marked in one way or other).

Turning now to the German (A-V2) vs. the Yiddish-Icelandic-Kashmiri (S-V2) distinction, I hypothesize that German Comps are of the English type — lexicalizing both subordinate status and complement type, whereas the latter group of languages do not possess Comps, but Mood and Subordinators. Thus, German shows the main-subordinate asymmetry, and the latter languages do not.

5.4 EXPLAINING ASYMMETRIES

One of the desirable consequences of this account is that a principled explanation now emerges as to why the clausal structures of main and subordinate clauses in S-V2 languages like Kashmiri and Yiddish **have to be** different, a result Diesing wanted for Yiddish but could not explain. Since the element that Diesing analyzed as Comp (*az*) in Yiddish is a simple marker of subordination, it cannot be available in a root context, by hypothesis, whereas it must be available in an embedded context yielding different structures for root and embedded contexts.

A similar account can be given for the clausal structure of Kashmiri, a S-V2 language outside the Germanic family. As noted earlier, Kashmiri allows V2 in both root and embedded clauses. I repeat some examples (32) below.

(36a) laRkan **por** akhbaar
boy(E) read-Pst newspaper

The boy read the newspaper.

(36b) **az** por laRkan akhbaar
today read-Pst boy(E) newspaper

As for today, the boy read the newspaper.

(36c) **akhbaar** por laRkan az
newspaper read-Pst boy(E) today

It was the newspaper, that the boy read today.

(36d) me chi patah **ki** laRkan **por**
I(D) aux know that boy(E) read-Pst

akhbaar
newspaper

I know that the boy read the newspaper.

(36e) me chi patah **ki** **akhbaar** por
I(D) aux know that newspaper read-Pst

laRkan
boy(E)

I know that it was the newspaper that the boy read.

(36f) me chi patah **ki** **az** por laRkan
I(D) aux know that today read-Pst boy(E)

akhbaar
newspaper

I know that as for today, the boy read a newspaper.

Unlike root clauses, embedded clauses with V2 begin with the lexeme *ki*, which is taken to be the complementizer in most accounts of Kashmiri and other Indic languages. I will propose here, however, that *ki* is a simple marker of subordination. Only the subordinate clause has an additional layer of structure above the MP, but both clauses possess a verbal M node which is responsible for the S-V2 observed in Kashmiri. The structure of V2 subordinate clause is given in (37).

(37)

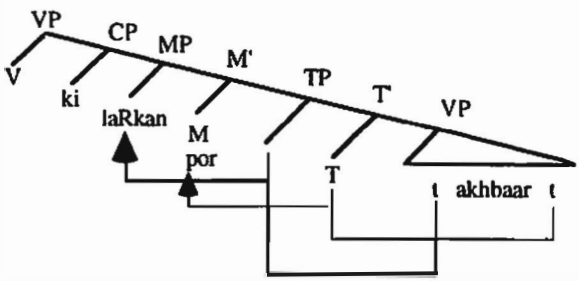

Let me now summarize the parametric theory of V2 I have presented thus far:

(38)

I. Mood marking is obligatory in all clauses, main and subordinate.

II. The strategies of Mood marking in Universal Grammar may be verbal (empty mood or affixal mood attracting V-movement) or non-verbal (structural or through lexical complementizers).

III. The category known as "Comp" should be decomposed into Mood and Subordinators. Some languages lexicalize/conflate the two, whereas others lexicalize them separately.

The choice of options in II and III interacts to yield A-V2 and S-V2 languages. S-V2 arises when a language/construction has an empty Mood that hosts verb movement in embedded clauses. However, this is possible only if the language lexicalizes Mood and Subordinator separately. If they are lexicalized together as Comp, another means of Mood-marking must be sought, one that crucially does not involve verb movement to empty Mood. This is the situation with embedded clauses in A-V2 languages.

Having presented an account of V2 that is able to accommodate the grammatization of both A- and S-V2, I turn to some consequences of the proposal in the next section.

5.5 SOME CONSEQUENCES

5.5.1 Subordinators and *wh*-movement in Indirect Questions

In languages with simple subordinator Comps, the elements analyzed traditionally as Comp— Korean *-ko* and Japanese *-to* and Kashmiri *ki* and Hungarian *hogy* —always proved problematic when viewed as items parallel to *that*, because in indirect questions, the *wh*-word follows, rather than precedes these lexemes (as it should under the CP analysis). I show an example of the relative ordering of *wh* and subordinator in Kashmiri to illustrate this point.

(39a) tse chay khabar **ki** **kyaa** kor tem
you aux. know that what did he

You know what he did.

(39b) *tse chay khabar **kyaa** **ki** kor tem
you aux know what that did he

You know what he did?

This is in contrast to the situation in Swedish, Norwegian, and Dutch (and also Danish) where in indirect questions, the *wh*-word **precedes** a lexical complementizer (adapted from Platzack 1986a:41(ex. 33b), Taraldsen 1986:8(ex. 16), and Weerman 1989:51(ex. 87)).

(40) Han undrar **vem**$_i$ **som** e_i inte hade oppnat
I wonder who that not had opened

dorren
the door

I wonder who did not open the door.

(41) Vi vet **hvem** **som** ikke skjonte dette
We know **who** **that** not understood this

sporsmalet
question

We know who did not understand this question.

(42) Henk vraagt [$_{CP}$ **wie**$_i$ [$_C$ **(of)** [t_i Marie een
Henk asks who whether Marie a

boek geeft]]]
book gives

Henk asks who gives a book to Marie.

An account for this contrast can be made in the following manner. It is natural to assume that *wh*, when it moves in the syntax, moves to the Spec of the head that carries Mood information because *wh* is sensitive to clause-type, and we can assume that this sensitivity is reflected as Spec-Hd agreement. Therefore, in Kashmiri, where Mood and Subordinator are kept apart in embedded clauses, *wh* should move to the Spec of M, as shown in (43) below. This is also the head to which V moves in V2. This gives rise to 'ki-*wh*-Vf' order, as desired. (See section 5.7 for a comparison with Icelandic/Yiddish indirect questions.)

(43)

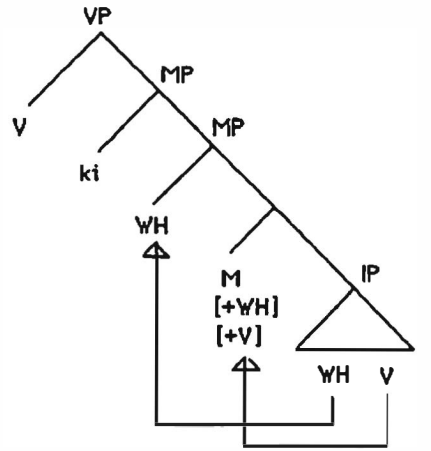

As shown earlier, there is overt evidence in Kashmiri for the dissociation of Mood (verbal) and Subordination. However, Swedish, Norwegian, Dutch (and perhaps Danish too) are A-V2 languages, which means that they have complementizers which conflate Mood and Subordinator. Therefore, when *wh*-movement takes place in indirect questions, *wh* will move to the Spec of Comp, yielding '*wh*-Comp' order. Since there are no Subordinators, by hypothesis, nothing can precede the *wh* in the embedded clause.

5.5.2 Subordinators and Selection

One fact about the element that has been analyzed as Comp in Korean is that it does not satisfy the selectional requirements of the matrix V. The account I have given of the complementizer system cross-linguistically yields a simple answer to this question. The element *-ko* in Korean is simply a subordinator; therefore, it is natural that it does not enter into any selectional relation vis-à-vis the matrix verb. This is also the case with Kashmiri *ki*, as shown by its presence even in indirect questions.[16]

[16] The fact that these elements also function as coordinating conjunctions in both languages also sits well with the idea that the content of these forms is essentially empty. Consider, e.g., the coordinating use of Kashmiri *ki*: ba karaa yi kaam ki tse karakh 'I do-Q this work or you do'.

5.5.3 A-V2 Phenomena in Kashmiri

Another aspect of Kashmiri syntax which would otherwise remain a puzzle receives an explanation in our approach. Although we have treated Kashmiri as a S-V2 language, there are two situations where V2 is prohibited— in relative clauses and certain adverbial clauses.[17]

(44) [$_{MP}$ yus laRk [$_{M'}$ raath [$_{VP}$ batI khyv-aan
which boy yesterday food eat-NPerf

oos]]]
was

The boy who was eating dinner yesterday . . .

(45) [$_{MP}$ yelyi [$_{M'}$ ba [$_{VP}$ paRhaaii khatam kar]]]
when I studies finish do

When I finish my studies . . .

I believe it is possible in my system to give a principled account of this behavior. The relative clause is introduced by a *wh*-element, and the adverbial clauses are introduced by the lexeme *yelyi* 'when'. I hypothesize that although Kashmiri dissociates Mood and Subordinator in *ki*-clauses, the introducers of relative clauses and adverbial clauses are lexemes which conflate both Mood and Subordinator. If this is the case, then the prediction is that these clauses behave like embedded

---

[17] The adverb *raath* 'yesterday' in (44) and the NP subject *ba* 'I' in (45) are outside VP since they precede the constituents like *hamesh* 'always', which in Kashmiri always mark the left edge of VP. The contrast in (i) below shows that the subject NP must move out of VP at SS for reasons discussed in chapter 6. The temporal adverbs like *raath* appear in Spec-MP or are adjoined to TP if Spec-MP is filled.

(ia) yelyi tse hamesha apzyi kath karakh tse pyath kus karyi
when you always false tale do you on who do-will
pat patsh
later believe
When you always say a lie, who will believe you later.

(ib) *yelyi hamesha tse apzyi kath karakh tse pyath kus karyi pat
when always you false tale do you on who do-will later
patsh
believe
When you always say a lie, who will believe you later.

clauses in German, showing no V2, since no Mood is available separately.

The hypothesis, called upon simply for this purpose, that a language may possess both kinds of complementizer systems is not *deus ex machina*. When we turn to languages with morphologically rich complementizer systems, we see exactly the situation we hypothesized for Kashmiri. Nominalizations in Korean and Quechua provide the relevant examples. Korean possesses an agglutinative and partially templatic type of morphology. The following is a rough (uninterpretable) representation of templatic slots in verbal morphology.

(46) Stem-(Caus/Pass)-(Honorofic)-Tns-(Tns/Aspect-Retro Tns)-Mood-(SUB)

mek-hi-si-ess-ess-te-la-ko
eat-Pass-HON-Pst-Perf-RETRO-MOOD-SUB

The affixes indicating Mood occupy slot 7. When a clause is nominalized, the nominalizing affix takes up the same slot.

(47) John-i pap-ul mek-ess-**um**
John(N) meal(A) eat-Pst-**NML**

John's having eaten the bread.

However, although we have seen that the verbal Mood markers can be followed by the Subordinator *-ko*, the nominalized verb does not allow further affixation of *-ko*.

(48) *Bill-un [John-i pap-ul mek-ess-**um-ko**]
Bill-TOP John(N) meal(A) eat-Pst-**NML-SUB**

anta
knows

Bill knows that John ate the meal.

Yoon (1989) provides detailed evidence that the nominalizer should be treated as a nominal Comp, based on the fact that it occupies the same morphological slot and on its sensitivity to selection by matrix predicates. This is the kind of behavior expected of Comps in languages like English. On the basis of this and the obvious subordinate status of nominalized clauses, we can hypothesize that the nominal complementation system lexicalizes both subordination and mood, whereas they are kept apart in the verbal system. Thus, within

the same language, we have both the Kashmiri type and the German type of complementation systems. This certainly makes plausible the account we offered for Kashmiri non-V2 clauses.

5.5.4 Frisian: Liberal A-V2

Frisian (and Mainland Scandinavian) shows standard properties of V2 in declarative main clauses (cf. de Haan & Weerman 1986, Holmberg 1986, Vikner 1991, Iatridou & Kroch 1992, Reinholtz 1993, Rambow & Santorini 1995).[18] The finite verb must immediately follow the clause-initial constituent, as shown in (49a) below; any other position of the finite verb is ruled out, as shown in (49b) below.[19]

(49a) my sjocht hy oan
me sees he at

He looks at me.

(49b) *my hy sjocht oan
me he sees at

He looks at me.

Frisian also exhibits optional V2 in subordinate clauses if they are asserted. Vikner (1991), among others, has argued that embedded V2 in these languages is restricted to complements of bridge verbs, as shown in (50a). Embedded V2 is disallowed in subject and adjunct clauses or the complements of the negative and negated verbs. The datum (50b) shows that the finite verb remains at the end of the clause, embedded under an inherently negative verb like *doubt*. (50c), on the other hand, shows V2 is ruled out in complements embedded under negative verbs. (50d), like (50c), shows that embedded V2 under a negativized verb is not possible either.

(50a) pyt sei dat my hie er sjoen
Pyt said that me had he seen

Pyt said that he had seen me.

[18] Questions and imperatives in Frisian, however, exhibit VI order.
[19] The Frisian data used in this section is taken from deHaan & Weerman (1986), Iatridou & Kroch (1992), and Rambow & Santorini (1995).

(50b) pyt betwivelet dat er my sjoen hie
Pyt doubts that he me seen had

Pyt doubts that he had seen me.

(50c) *pyt betwivelet dat my hie er sjoen
Pyt doubts that me had he seen

Pyt doubts that he had seen me.

(50d) *ik tink net dat hy sjocht my oan
I think not that he sees me at

I don't think he looks at me.

The facts of the Frisian-type of V2 receive an account within the theory of complementizers developed here. Following Rambow and Santorini (1995), I assume that there are two types of *dat* complementizers in Frisian which are homophonous (cf. also Weerman 1989:94): one type is semantically vacuous and the other type has semantic content. I suggest that the former type, call it dat_1, is analogous to the Kashmiri *ki*, a pure subordinating complementizer, and the latter type, call it dat_2, is analogous to the Kashmiri *y*-type which conflates both subordination and mood-marking function. Adopting the logic of the argument of Iatridou and Kroch (1992) and Authier (1992) that the complementizer that is compatible with a matrix bridge verb is semantically vacuous and deletes at LF, it follows that dat_1 can only be used as a complement of a bridge verb, yielding (51a) as the syntactic structure of (50a). The other complementizer, dat_2, conflates both mood and subordination function and as such yields (51b) as the syntactic structure of (50b).

(51a) pyt sei [CP [C dat_1 [MP my [M hie [TP er ...sjoen]]]]]
(51b) pyt betwivelet [CP [C dat_2 [TP er my sjoen hie]]]

5.6 A (RESIDUAL) PROBLEM

In addition to ki-*wh*-V order, Kashmiri also allows, in fact prefers the following word order in embedded questions: ki-Top-*wh*-V

(52a) me chi patah **ki** **batl** **kemyi** **khyav**
I(D) aux know that rice who eat-Pst

I know (that), as for food, who ate it.

The *ki-*wh*-Top-V order as we show in (52b) is impossible.

(52b) *me chi patah **ki kemyi batI khyav**
I(D) aux know that who rice eat-Pst

I know (that) who ate rice.

Since *wh* should move to the Spec of M, which is the position of the finite verb, it is expected that *wh* should be adjacent to V (thus accounting for why the second structure (52b) is ill-formed). The first structure given is expected; as I have argued earlier, Kashmiri allows a topic to precede the preverbal focus constituent. Additionally, I have argued that these topics are adjoined to MP.

The word order facts noted in (52) contrast with those found in Yiddish. Diesing (1990) reports that the word order in indirect questions in Yiddish is *wh*-Top-V and not *Top-*wh*-V. The same order is found in the Icelandic indirect question (cf. Rognvaldsson & Thráinsson 1990). Let us first note some differences, with respect to indirect question formation, between Yiddish/Icelandic and Kashmiri.

First, the order of constituents before the finite verb in Icelandic/Yiddish is *wh*-Top. Second, unlike Kashmiri, the subordinator comp *az* (or *vos*) in Yiddish/Icelandic is incompatible with indirect questions. Since I hypothesized that Yiddish *az* is simply a subordinator, its incompatibility with *wh* is surprising, as this looks like the behavior of an element that is selected. Neither of these is expected in my analysis. Finally, if V is in M, and M is [+*wh*], then *wh* should occupy its Spec, giving Top-*wh* order.

In the absence of a better alternative to account for these contrasting V3 patterns, I suggest that the specifiers of MP iterate iff the head M^0 needs two ([+wh] and [+Top]) features checked, as shown in (53). This iterated-specifier proposal is in fact consistent with the Minimalist assumptions (cf. Koizumi 1994, Chomsky 1995).

(53)

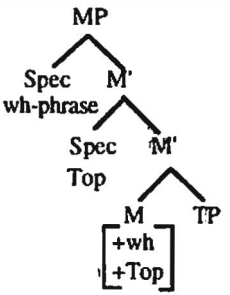

This structure is unavailable in direct questions because Yiddish does not allow topics in direct questions. In other words, in direct questions there is only one [+wh] feature in M^0 that needs to be checked. Because topics require contrastive stress in Yiddish indirect questions, I suggest that the lower Spec, which is closer to M^0, licenses topics (much like Kashmiri focus-stressed constituents that must immediately precede the finite verb). The outer Spec hosts the *wh*-phrase which checks the [+wh] feature in M^0. Thus, the account above suggests that the landing sites for *wh*-phrases are different in main clauses and subordinate clauses. This prediction is indeed supported by the Icelandic data as argued by Rognvaldsson and Thráinsson (1990).[20]

5.7 CONCLUSIONS

In this chapter I have proposed a parametric account of the V2 phenomenon that generalizes over Germanic **and** Kashmiri. This was made possible by making a plausible hypothesis that the category complementizer is not a unified category and that it should be dissociated into a category that indicates clause-type, or Mood and, for subordinate clauses, a category for subordinators. This category Comp in some languages lexicalizes two functions: mood marking and subordination; in other languages, however, these two functions are assigned to two different lexemes. German, it was argued, is a language whose Comp lexicalizes both functions, whereas Kashmiri is a language that allocates these two functions to different lexemes. The traditionally known complementizer *ki* in Kashmiri actually encodes only the subordination function. Further, I hypothesized that mood-marking is required universally.

Assuming that clause-type marking is required universally on clauses, I argued that verb movement will be prohibited in the subordinate clauses of the A-V2 languages (e.g., German), wherein the Comps indicate both the clause-type and the subordinate status, since there is no landing site (Mood) for the verb. On the other hand, in S-V2

[20]Rognvaldsson and Thráinsson (1990) propose that in matrix questions the verb moves to Infl and the *wh*-word moves to Spec of IP. In subordinate clauses they assume that the *wh*-word moves to Comp (C^0) and the topic moves to Spec-IP. A similar analysis of indirect questions is provided by Holmberg (1986) who assumes the verb moves to Comp and the *wh*-phrase moves to CP-Spec in matrix contexts, while in embedded contexts the verb moves to Infl, the *wh*-word moves to Comp, and topic moves to Spec-IP. Both of these analyses have one thing in common: for indirect questions the clause only projects up until C', NOT CP. This is conceptually as unattractive as the fact that XPs (*wh*-phrases) move into X^0s (C^0).

(Yiddish, Icelandic, Kashmiri) languages, where the Comp is a simple subordinator, V2 is possible (to Mood) and **required** in subordinate clauses because otherwise there would be no way of determining the clause type. This account thus explains why the clausal structure of Yiddish main and subordinate clauses **have** to be different: the Comp *az* of Yiddish is a simple marker of subordination, it **cannot** be available in **root** contexts, while it **must** be available in **embedded** contexts.

CHAPTER 6
SUBJECT POSITION, OBJECT POSITIONS, AND CASE

6.0 INTRODUCTION

In chapter 3, it was proposed that Kashmiri is hierarchically structured. Central to that proposal was the existence of three functional projections MP, TP, AGRP on top of the verb phrase, as shown in (1) below.

(1)

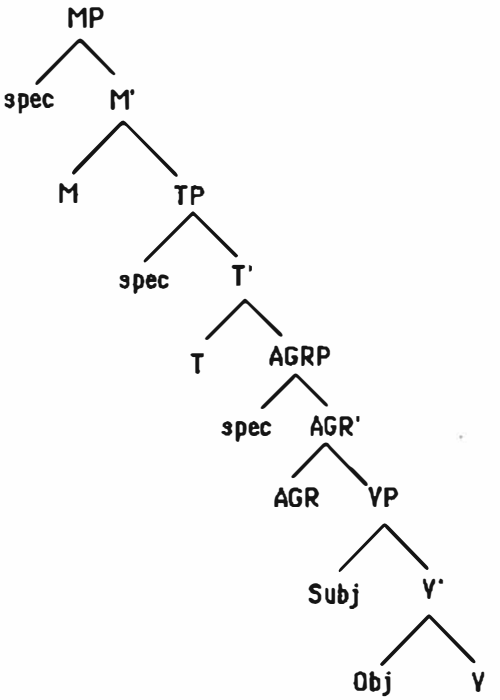

In chapter 5, it was argued that Kashmiri V2 can be straightforwardly accounted for by proposing a functional projection MP, the head of which hosts finite verb movement. Further, it was also argued that the Spec of MP was an A' position to which, in principle, any XP can move.

The goal of this chapter is to argue that the phrase structure of Kashmiri requires two other functional projections, namely, TP and

AGRP.[1] Specifically, evidence will be presented to show that in Kashmiri, Spec-TP hosts subjects and Spec-AGRP hosts nominative objects. A Case-theoretic account of subject and object movement to Spec-TP and Spec-AGRP, respectively, will follow.

The chapter is organized in the following manner: Section 6.1 discusses the various positions in the Kashmiri phrase structure where objects appear. Evidence will show that at S-Structure nominative objects and dative objects move out of VP; whereas the accusative objects stay *in-situ*. The landing site of the nominative object is, it will be argued, different from that of the dative object. Next, section 6.2 discusses the S-Structure position which subjects (nominative, dative, and ergative) occupy. A good part of the discussion in this section will focus on Experiencers and subjects of perfect predicates. Of particular interest are the Experiencer constructions, better known as dative subject constructions (DSC). In DSCs, the subject is an Experiencer marked with a Case generally associated with the indirect object, whereas the object, a Theme, appears with nominative Case and triggers predicate agreement (see Verma & Mohanan 1990 for case studies on different Indic languages). These constructions have generated a great deal of discussion in generative grammar, particularly with reference to the grammatical status of the dative nominal. Davison (1988), Jayaseelan (1990), and Gair (1990), among others, treat the dative nominal in the DSCs as the derived subject while Sridhar (1979) and Rosen and Wali (1989) have argued that the dative nominals are indirect objects at S-Structure. In section 6.2 then, evidence will be provided to show that the dative NP in DSCs is a derived subject, not an indirect object. Then, in section 6.3, a theory of Case is proposed, which gives a principled account of the distribution of nominative subjects and objects and non-nominative subject and objects. Section 6.4 shows how the Case proposal developed here accounts for the following Case arrays: nominative—accusative, dative—nominative, and ergative—nominative. Section 6.5 accounts for the distribution of nominative objects in selected languages. And finally, in section 6.6, some consequences of our Case proposal are explored.

6.1 OBJECT POSITIONS

In this section we take a close look at the distribution of nominative, accusative, and dative objects. I will provide evidence to show that

[1] I ignore here the controversy whether TP dominates AGRP, or vice-versa, because it has no bearing on the ensuing discussion. Note: I will also ignore the exact (Focus/Topic) semantic interpretation of Kashmiri sentences because it is not directly relevant to the discussion in this chapter.

whereas dative and nominative objects occupy a position outside of VP at S-Structure, accusative objects stay *in situ*. I will also argue that nominative objects move out of VP to a position below TP,[2] I call AGRP, the Spec of which is arguably an A-position. Dative objects, on the other hand, move to an A' position, presumably an adjoined position (see section 6.1.4). Further, arguments are provided to claim that dative object movement is motivated by specificity requirements, whereas nominative object movement is motivated by Case-theoretic requirements.

6.1.1 Objects that Move

Although admittedly there is no straightforward, direct, and robust evidence to show the exact positions where objects appear, there is, however, some (indirect) evidence to suggest that nominative and dative objects in Kashmiri do indeed move out of VP, while accusative objects do not. Such evidence allows us at least to estimate the position in the phrase structure to which the objects move. The first argument is based on the interpretation of adverbs (*à la* Travis 1988) vis-à-vis their position relative to the objects. The other argument is based on the fact that in order for NPs to be interpreted as specific, they must appear outside of VP to escape "existential closure" (*à la* Diesing 1992).

6.1.1.1 Adverb Interpretation

The first evidence to the fact that certain objects move in Kashmiri comes from a different interpretation of certain adverbs depending on their position in the phrase structure. This insight comes to us from the work of Travis (1988). She observes that some adverbs like *quickly* receive a different interpretation depending on where they appear in a clause: there is a subtle meaning difference between (2a, b) and (2c, d).

(2a) Quickly John will be arrested by the police.

(2b) John quickly will be arrested by the police.

(2c) John will be quickly arrested by the police.

(2d) John will be arrested quickly by the police.

Travis (1988) notes that in (2a, b) the adverb *quickly* modifies the event of arresting, while in (2c, d), *quickly* modifies the process of the

[2] Later in section 6.2, I will argue that Spec-TP is reserved for subjects.

arrest. She claims that the adverb gets a process reading (2c, d) when it is adjoined to the V-projection (licensed by V) and it gets an event reading when it is adjoined to the T-projection (licensed by T). Assuming with Travis, and also Mahajan (1990), that the semantic interpretation of adverbs like *quickly* is universally structure dependent, we are able to locate the surface position of objects in Kashmiri.

In Kashmiri the word orders in (3), among others, are possible in transitive ergative clauses with nominative objects.

(3a)

raath	kar	laRk-an	jal jal
yesterday	did(f,sg)	boy(E)	quickly

kAAm	khatam
work(N,f,sg)	finish

Yesterday the boy quickly finished the work.

(3b)

raath	kar	laRk-an	kAAm
yesterday	ate(f,sg)	boy(E)	work(N,f,sg)

jal jal	khatam
quickly	finish

Yesterday the boy finished the work quickly.

In (3a), we get a clear event reading where *jal jal* modifies the event of the work that was done; i.e., the work was done right away. In (3b), on the other hand, we get a process reading, where *jal jal* modifies the process of the work; i.e., the manner in which the work was done was hurried. The leftward movement of the object in (3b), with the concomitant "process" reading, leads to the conclusion that the object is located at a position which is hierarchically superior to the adverb *jal jal*. This position must be above VP, assuming that the adverb is adjoined to VP, but at the same time it must be below TP since the Spec of TP is host to the subject, given that the verb-second position immediately precedes the canonical subject position. I suggest that the position to which these nominative objects move is the Spec of AGRP (see (1) above). In (3a), which does not permit a process reading, I suggest that the adverb is adjoined to the AGRP, higher than the Spec-AGR position.

Next I provide data from Quantifier Floating (cf. Sportiche 1988) in Kashmiri to locate the position of direct objects and to establish, at the same time, the existence of a maximal projection between T^0 and VP to

which nominative objects can move. In Kashmiri, direct objects can float quantifiers as shown in (4).

(4a)

raath	kh-eyi	laRk-an	jal jal	saarayi
yesterday	ate(m,pl)	boy(E)	quickly	all(N)

ambI
mangoes(N,m,pl)

Yesterday the boy quickly ate all the mangoes.

(4b)

raath	kh-eyi	laRk-an	ambI
yesterday	ate(m,pl)	boy(E)	mangoes(N,m)

jal jal	saarayi
quickly	all(N)

Yesterday the boy ate quickly all the mangoes.

(4c)

raath	kh-eyi	laRk-an	saarayi
yesterday	ate(m,pl)	boy(E)	all(N)

ambI	jal jal
mangoes(N,m)	quickly

Yesterday the boy ate all the mangoes quickly.

Example (4a) has the clear event reading; the adverb modifies the event — that the boy ate all the mangoes as soon as they were made available to him. In (4b, c), there is a clear process reading, the adverb modifies the process of eating mangoes — the manner of the eating was hurried. In (4a, b), I assume with Sportiche (1988) that floated quantifiers locate the D-Structure position of the NP it is floated out of.[3] The stranded Q in (4b) must be within the VP, indicating a covert direct object adjacent to it. In (4c), note that the object NP moved out of VP pied-pipes Q. Again the position to which the direct object moves is out of VP but crucially below T^0, a position we suggest is Spec of AGRP.[4]

---

[3] Particularly in Sholnsky (1991), it is claimed that the Q actually is the head of the constituent [QP] taking an NP complement and that when NP moves through [Spec, QP] it leaves Q stranded.

[4] I suggest that nominative objects do not adjoin to VP simply because we assume that adjoined positions are not A-positions— positions to which Case is assigned. See also footnote 6.

Turning now to objects that are assigned lexical dative, we notice similar adverbial interpretation effects (5) as shown earlier in (3) and (4). Examples (5a) and (5b) give a process reading whereas (5c) and (5d) give an event reading.

(5a) maasTar-an looy laRk-an jal jal saaryini
teacher(E) beat boys(D) quickly all(D)

The teacher hit all the boys quickly.

(5b) maasTar chu laRk-an jal jal saaryini
teacher(N) beat boys(D) quickly all(D)

laayaan
hits

The teacher hits all the boys quickly.

(5c) maasTar-an looy jal jal laRk-an saaryini
teacher(E) beat quickly boys(D) all(D)

The teacher quickly hit all the boys.

(5d) maasTar chu jal jal laRk-an saaryini
teacher(N) beat quickly boys(D) all(D)

laayaan
hits

The teacher quickly hits all the boys .

Again, the adverb interpretation facts in (5) can be explained in the following manner: In (5a) and (5b) the adverb is adjoined to the V-projection and the objects move out of VP. In (5c) and (5d), however, the adverb is adjoined to the T-projection as the event reading indicates. The objects move out of the base position in each case as indicated by the stranded quantifier. I suggest that in each case above, the objects move out of VP. Next I turn to the second piece of evidence to support the hypothesis that some direct objects in quirky constructions move out of VP.

6.1.1.2 Specificity and Object Movement

The next piece of evidence to establish that certain objects move out of

VP is provided by the correlation that obtains between specificity and object movement in Kashmiri. It is commonly assumed that in English indefinite NPs with adjectives such as *certain, particular* form specific NPs, where specificity is correlated with a wide scope reading of that NP (Fodor & Sag 1982). In contrast to English-like languages, there are languages like Kashmiri, Hindi, etc., where indefinites in the object position are always unambiguously specific or nonspecific. For example, in Kashmiri, if the object NP bears a dative Case-marking or if it shows up with nominative Case, it is obligatorily interpreted as specific.

Diesing (1992) has proposed that the domain of existential closure is the VP.[5] In other words, the existential quantifier cannot bind (have the same index as) an NP [+specific]. The indefinites that occupy a position outside of VP are not bound by existential closure; they escape the existential reading. If so, then in Kashmiri, nominative objects, and dative direct objects, which are always interpreted as specific must move out of VP since they cannot be bound by existential closure. This prediction is in fact borne out as the contrast in (6a), (6b), and (6c) suggests.

(6a)

raath	vuch	DaakTar-av	akh
yesterday	saw(m,sg)	doctors(E)	one

mariiz	waarpaaThyi
patient(N,m,sg)	carefully

Yesterday the doctors examined a patient carefully.

(6a')

???raath	vuch	DaakTar-av	waarpaaThyi
yesterday	saw(m,sg)	doctors(E)	carefully

akh	mariiz
one	patient(N,m,sg)

Yesterday the doctors examined a patient carefully.

[5] I will have to assume that Diesing's proposal also applies at SS (in addition to LF) in Kashmiri.

(6b)

raath	vuch	DaakTar-av	mariiz-as
yesterday	saw(3,m,sg)	doctors(E)	patient(D,m,sg)

waarpaaThyi
carefully

Yesterday the doctors examined a patient carefully.

(6b')

???raath	vuch	DaakTar-av	waarpaaThyi
yesterday	saw(3,m,sg)	doctors(E)	carefully

mariiz-as
patient(D,m,sg)

Yesterday the doctors examined the patient carefully.

(6c)

az	vuchan	DaakTar	mariiz-as
today	see-Fut(3,pl)	doctors(N)	patient(D,m,sg)

waarpaaThyi
carefully

Today the doctors will examine the patient carefully.

(6c')

???az	vuchan	DaakTar	waarpaaThyi
today	see-Fut(3,pl)	doctors(N)	carefully

mariiz-as
patient(D,m,sg)

Today the doctors will examine the patient carefully.

In each pair above, the object is interpreted as specific and, as such, must be outside of VP. In (6a) the object has moved over a VP-adjoined adverb like *waarpaaThyi* to a position outside of the nuclear scope of (existential quantifier) the VP, thus escaping the existential reading resulting in a well-formed sentence. In (6a'), however, the nominative object remains *in situ* resulting in the awkwardness of the sentence. Similar contrasts obtain in the pairs (6b) and (6b') as well as (6c) and (6c').

6.1.2 Objects that Do Not Move

Accusative objects do not need to move out of their base position as

shown in (7). These objects are always interpreted as nonspecific and thus can stay *in situ* and be bound by the existential closure yielding (7a) as acceptable. The awkwardness of (7b), on the other hand, is due to the dislocated position of the object requiring focal stress. The data in (7), thus, contrasts nicely with the data in (6). The data in (7) is significant in that it does not follow Holmberg's (1985, 1986) generalization that object NP moves leftwards when the governing verb is phonetically empty (has moved out of VP).

(7a) az vuch-yi DaakTar waarpaaThyi
today see-Fut(3,sg) doctor(N,m) carefully

mariiz
patient(A,m)

Today the doctor will examine a patient carefully.

(7b) ???az vuch-yi DaakTar mariiz
today see-Fut(3,sg) doctor(N,m) patient(A,m)

waarpaaThyi
carefully

Today the doctor will examine a patient carefully.

Having established that certain objects in Kashmiri move out of VP, next I show that not all object movement is to the same position.

6.1.3 Object Advancement or Specificity Movement?

I will be using object movement to an A-position[6] as an instance of Object Advancement, whereas movement to an A-bar position will be taken to be an instance of Specificity Movement. In this section, it is argued that nominative object movement is an instance of Object Advancement (A-movement), whereas dative object movement is an instance of Specificity Movement (A'-movement). Consider the sentences in (8).

---

[6] Much of the work in the G-B framework has relied very extensively on a distinction between two fundamental types of positions in structures: A-(argument) positions and A-bar (non-argument) positions. Recent works of Mahajan (1990), Webelhuth (1989) and Deprez (1989), among others, have challenged the empirical assumptions of this distinction. For our purposes, we take an A-position to be one where Case (or phi features) can be assigned/checked.

(8a) laRkan$_i$ vuch panyis$_{i/*j}$ garas manz swa kuur$_j$
boy(E) saw self's house in that girl

waarpaaThyi
carefully

The boy carefully saw that girl in his/*her house.

(8b) laRkan$_i$ vuch swa kuur$_j$ waarpaaThyi panyis$_{i/j}$
boy(E) saw that girl carefully self's

garas manz
house in

The boy carefully saw that girl in his/her house.

In (8a), the reflexive possessive cannot be A-bound by the nominative objects since the required c-commanding relations do not obtain. The reflexive possessive in this case is interpreted only with the subject. In (8b), on the other hand, the reflexive is interpreted with either the subject or the object. This leads to the conclusion that nominative objects must be in an A-position, given principle A of the Binding Theory that antecedents must be in a c-commanding A-position to be able to locally A-bind reflexive anaphors. The position to which nominative objects move, we suggest, is the Spec of AGRP.

Next consider the data in (9). In (9a), the object acts as an antecedent to the reflexive possessive in the locative phrase indicating that the object is in an A-position. In (9b) and (9c), however, the objects fail to control the reflexive possessive, suggesting that the position to which objects have moved is not an A-position.

(9a) raath vuch tem$_i$ swa kuur$_j$ panyis$_{i/j}$
yesterday saw he(E) that girl(N) self's

garas manz waarpaaThyi
house in carefully

Yesterday he saw that girl carefully in his/her house.

(9b) raath vuch tem$_i$ kooryi$_j$ panyis$_{i/*j}$
yesterday saw he(E) girl(D) self's

garas manz waarpaaThyi
house in carefully

Yesterday he saw the girl carefully in his/her house.

(9c) raath oos su$_i$ tas kooryi$_j$ panyis$_{i/*j}$ garas
yesterday was he(N) that girl(D) self's house

manz waarpaaThyi vuchaan
in carefully see-prt

Yesterday he was looking at (seeing?) that girl carefully in his house.

The contrast between (9a) and (9b,c) suggests that object movement in the case of (9b,c) is to an A-bar position, which explains lack of control of reflexive in the adjunct clause by the object.

The picture that emerges from the data in (7) to (9) can be captured in terms of the following generalization:

(10) Object Advancement (A-movement) takes place only in those sentences where the predicate does not assign structural Case to its complement; all other instances of object movement are instances of Specificity Movement.

According to (10), then, only unaccusative verbs in Kashmiri, like perfect participle, passive and psych verbs, allow Object Advancement; all other instances of movement are a result of specificity movement. The generalization in (10) allows us to make the plausible assumption that Object Advancement is a Case-seeking movement operation and, crucially, not an operation driven by specificity requirements. That this assumption is correct is supported by the data in (11), where the nominative object cannot be construed as specific but it nevertheless appears out of its base position.

(11) azkal chu-na laRk-as jahal jal jal
these days aux-Neg boy(D) anger(N) quickly

khasaan
rises

These days the boy does not get angry quickly.

6.1.4 Moved Objects, AGRP, and Specificity

The generalization of object movement in Kashmiri, (10) above, requires two positions above VP, but below TP, to host moved object (theme) NPs: dative NP to an A' position and the nominative NP to an A-position. Following the recent work in Minimalism (Mahajan 1990, Chomsky & Lasnik 1993, Chomsky 1993), I will assume that any "narrowly" L-related position — minimally, Specifier of T/AGR or Complement of Verb — involved in (Case/phi) feature checking is an A-position; an A-bar position, on the other hand, is an adjunct position not involved in (Case/phi) feature checking.[7] I suggest that nominative objects move to the Spec of AGRP (projection), sandwiched between VP and TP, as shown in the syntactic structure of the Kashmiri clause in (1) earlier.[8] The dative objects, on the other hand, scramble out of VP to adjoin to the AGRP projection. The relevant structure is shown below:

(12)

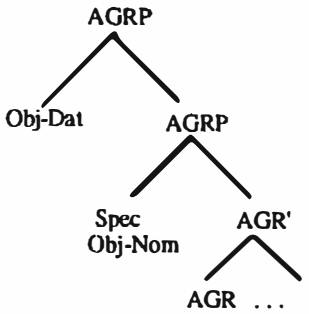

The structure in (12) raises two obvious questions: (i) why doesn't the specificity-driven scrambling operation that moves dative object at S-structure wait until LF when it is more economic (cheaper) to move (à la principle Procrastinate)? and (ii) how are "specificity effects" derived

[7] This definition is slightly different from Chomsky's version since Case checking in his theory is restricted only to Spec-Head configuration of functional categories. I am assuming that the complement position of verb is a position involved in Case checking.

[8] Later in section 6.3.2, I will argue that Agr projections do exist, contra Chomsky (1995:349-355). The status of these projections, however, is special in the sense that when there are no agreement features that require checking, then the AgrP is not projected (Shlonsky 1996).

in Kashmiri? I will address these questions next.

With respect to the question of the cost-effectiveness of the specificity-driven scrambling of the dative object at S-structure, there are two plausible solutions. One solution follows from Fukui's (1993) Parameter Value Preservation measure.[9] On this view, the leftward movement associated with scrambling will be costless in Kashmiri since this operation produces a structure that preserves the head-final parameter of the language. Now, when both overt and covert operation come at the same price, I suggest that some version of Pesetsky's (1990) Earliness Principle will then favor the overt operation.[10] The other (more) plausible alternative is to follow Bhatt and Anagnostopoulou (1996) and claim that the overtness of the specific object movement operation is related to how scope relations are marked in Kashmiri. Scope interpretation in Kashmiri, like Hindi (Bhatt & Anagnostopoulou 1996) and Japanese (Kuroda 1971), reflects the surface c-command relationships ("rigidity effects"). Thus, if a c-commanding quantifier precedes another quantifier at S-Structure, it takes scope over it. So, a sentence like (13) below, does not allow ambiguous interpretation; the LF $\forall y \exists x$ saw (x, y) is ruled out.

(13)	kahnsyI	vuch	saaryini
	someone(E)	saw	everyone(D)
	$\exists > \forall$; $*\forall > \exists$		

Given such an overall scope-marking system in Kashmiri, the overt movement of dative objects is expected if they are to be interpreted as being specific — they need to move out of VP to avoid existential closure (Diesing 1992).

With respect to the second question, I propose that in order for an NP in Kashmiri to be interpreted as specific, it needs to meet two requirements: (i) it has overt Case (or Agreement) morphology, and (ii) it appears in the checking domain of AGR.[11] Enç (1991) has convincingly argued that "the specificity of DPs is determined by an independent (of definiteness) mechanism" (1991:16). For Enç, the

---

[9] The parameter value preservation measure (Fukui 1993): a grammatical operation (Move α, in particular) that creates a structure that is inconsistent with the value of a given parameter in a language is costly in the language, whereas one that produces a structure consistent with the parameter value is costless.

[10] The intuition here is that if it does not cost anything to move something at a certain point in the derivation, then move it. This move does not violate the economy principle Procrastinate because UG provides, if Fukui (1993) is correct, the scrambling operation gratis.

[11] For more evidence that semantic interpretation depends on syntactic position, see especially Runner (1994) and Moorcraft (1996).

mechanism determining specificity is the overt Case morphology. On the other hand, Diesing (1990, 1992) argues that specific NPs have to move out of the VP to avoid existential closure.[12] Mahajan (1991a, 1991b) argues that AGR (his AgrOP) is responsible for specificity licensing in Hindi. Runner (1994), Moorcraft (1995, 1996) have also claimed that AGR might be implicated in specificity. The logic of the "AGR-specificity" argument is, by and large, as follows: because AGR is pronominal and pronouns are specific, anything co-indexed with AGR will be specific (Mahajan 1991a, 1991b).[13] There are three problems with (especially) Mahajan's account. First, Mahajan relies on Case Filter (DPs need Case at S-Structure) to move the (agreeing) object to Spec-AgrOP. The problem arises with lexically Case-assigned DPs, which in his theory (Mahajan 1990) will be assigned structural Case, but no agreement, under government by AgrO inside VP, which is the domain of existential closure. Dative DP objects, in his theory, then should not be able to be interpreted as specific. Contrary to the predictions of his theory, dative object NPs are always interpreted as specific in Kashmiri as well as in Hindi (see Butt 1993b). There is, therefore, no account in his theory of how/why dative (=Lexical) Case-assigned objects in Kashmiri (and Hindi) get specific interpretation. The other problem has to do with the Spec-Head AGR coindexing to yield "specificity." We have seen that some specific DPs, like dative objects, adjoin to AGRP in Kashmiri. Hungarian also utilizes the adjunction to AgrOP for specific objects (Radó 1994). Given these empirical facts, it is not clear how the Spec-Head coindexing mechanism will honor specificity effects in Kashmiri and Hungarian. Finally, as I have shown above, non-specific NPs can also trigger object agreement in Kashmiri which is problematic for Mahajan since under his account object triggering NPs must be specific. Butt (1993a, 1993b) provides evidence from Hindi to argue that nonspecific objects can indeed trigger agreement.

De Hoop (1996) has a promising proposal relating Case assignment to object NP interpretation, but, as I will show next, the empirical facts regarding object movement in Kashmiri do not follow from her

---

[12]Briefly, Diesing proposes the Mapping Hypothesis, which states that an NP inside the VP is under the scope of existential quantifier and it gets mapped into the nuclear scope (=interpreted as existential), whereas a VP-external NP is mapped into the restrictor, whence the presupposed (specific) interpretation. Diesing proposes that specific objects are VP-adjoined.

[13]Runner (1994) proposes a slightly different version. In his theory, he assumes AGR to be pronominal, i.e., it must be bound within its discourse. If so, then any DP associated with AGR, via Spec-Head coindexing, will be associated with the discourse since AGR must be associated with the discourse.

account. De Hoop distinguishes two kinds of structural Cases, weak and strong, and the interpretation of NPs crucially depends on what kind of Case they get. The weak (D-Structure) Case-assigned NPs are interpreted as part of the predicate, whereas the strong (S-Structure) Case-assigned NPs are interpreted as referential, partitive, generic and generic collective. In her theory, object scrambling is an A-movement, which is only possible with a strong reading of NPs; weak NPs must stay in their D-Structure position. Although conceptually an attractive proposal, it falls short of accounting for the properties associated with object movement in Kashmiri. Firstly, nominative specific object movement is not an instance of scrambling in the sense of de Hoop (1996: 150); it is, in fact, Case-driven in Kashmiri, like Hindi (Mahajan 1990). The Case generalization in Kashmiri is that if the object is not assigned structural Case by the verb, it must move to get Case somewhere, from AGR as I have been pointing out. Secondly, in De Hoop's account, scrambling triggers strong readings on object NPs, but scrambling is crucially an A-movement in her theory. However, as I have shown above, dative (specific) objects scramble out of VP to an A-bar position, contra de Hoop & Kosmeijer (1995) and De Hoop (1996). Kashmiri is not unique in having A-bar scrambling. Other V2 languages like German, Dutch, Frisian also allow IP-internal A-bar movement (cf. Vikner 1991, Holmberg & Platzack 1995). Thirdly, under de Hoop's analysis weak objective Case can only be licensed in the original D-Structure position, but in Kashmiri weak NPs do not necessarily stay in their D-Structure position: they invariably topicalize to clause-initial position (see chapter 4, for some evidence). Fourthly, dative Case on (direct) objects in Kashmiri is not a structural Case; i.e., it is not associated with a particular phrase structure position. Dative Case on objects appears to be associated with some lexical (albeit not inherent, i.e., theta-related) mechanism. And finally, even if we assume the dative Case on an object to be an expression of strong structural Case, it is not clear why it must move out of VP, as nothing in De Hoop's theory forces strong NPs to move; in fact, unscrambled objects can have a strong reading in her theory.

In view of these objections, I next pursue a different analysis for deriving specificity in Kashmiri. The proposal that I will outline utilizes the insights of the Minimalist Program (Chomsky 1993, 1995), specifically, the notion that operations of the computational system are driven by feature checking requirement.

First, let us remind ourselves of the relevant object movement facts in Kashmiri. They are:

(a) Nominative Case is assigned/checked in Spec-Head configuration of the AGR projection;

(b) Nominative objects can be interpreted as specific;
(c) Dative objects adjoin to AGR projection and are always interpreted as specific.

Following Chomsky (1995) and Kitahara (1997), I assume movement operations like scrambling, topicalization, etc., to be driven by the checking requirement of a strong (argument or operator) feature. Along this line, then, I hypothesize specificity to be a morphosemantic feature (like *wh*, Focus, Topic), following Sportiche (1995), generated under AGR, which drives this movement.[14] The favorable empirical consequence of this hypothesis is that even NPs with overt Case morphology must nevertheless move to the checking domain of AGR to be licensed with the specific interpretation. Under this approach, specificity licensing requires an NP to have morphological Case (cf. Enç 1991) and to be in a certain structural configuration (cf. Diesing 1992). For Kashmiri, the structural configuration licensing specificity is the checking domain of AGR. Further, I claim that indefinite specific object NPs in German (Diesing 1992), Hindi (Mahajan 1990, Butt 1993b, Bhatt & Anagnostopoulou 1996), Turkish (Kornfilt 1990, de Hoop 1996), Icelandic (Moorcraft 1996), Hungarian (Radó 1994), and Japanese (Miyagawa 1997)[15] move to the checking configuration of this (AGR) projection to be licensed as specific.[16]

Let me now discuss how Kashmiri facts are accommodated under my proposal. Because feature checking requires the relevant NP to be within the checking domain of AGR, dative objects in Kashmiri assigned a morphological Case lexically, presumably at D-Structure, move to the adjoined AGRP position to be licensed as specific (see (14) below).[17] Hungarian, I argue, also chooses the same mechanism for the

---

[14] As discussed above, generating the feature specificity under AGR is the logical choice given the cross-linguistic evidence of the association of AGR with "specificity" (see, Moorcroft (1995, 1996) for Icelandic, Mahajan (1991, 1992) for Hindi). Bhatt and Anagnostopoulou (1996) also argue that in Hindi-Urdu, specificity is licensed in an A-position outside of VP, presumably, under my account, in the Spec-Head configuration of AGR.

[15] Miyagawa (1997) argues against optional scrambling in Japanese and argues instead for base generation orders of verbal complements inside VP. He, however, notes one instance where real movement has occurred: the accusative object moves from its original position (next to the verb) to a position intermediate between the subject and the VP, a position he claims is similar to the specificity position in German (1997:10). I claim this position to be AGRP since the accusative object movement in question is neccesitated by contrastive topic/focus ("presupposed interpretation") feature-checking.

[16] See, Runner (1994) for more cross-linguistic evidence of this claim.

[17] A similar mechanism is involved in Hindi dative object interpretation. The

specific interpretation: postverbal (specific) objects in Hungarian are adjoined to AgrOP (Radó 1994).

With respect to agreement triggering (nominative) specific objects, I propose that these objects in Kashmiri move to Spec-AGRP to check nominative Case, and then move up to the adjoined AGRP position to check the specificity feature. This mechanism is shown in (15) below. Nonspecific agreement triggering objects, I argue, do not move to the adjoined position due, perhaps, to some economy principle (move only if necessary) like Procrastinate, militating against vacuous movement.[18] Assuming object agreement as the morphological expression of nominative Case checking, we maintain our hypothesis that specificity requires both morphological Case licensing as well as structural configuration licensing.

(14)

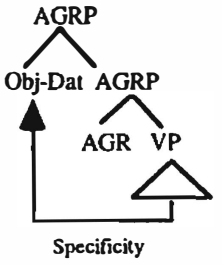

(15)

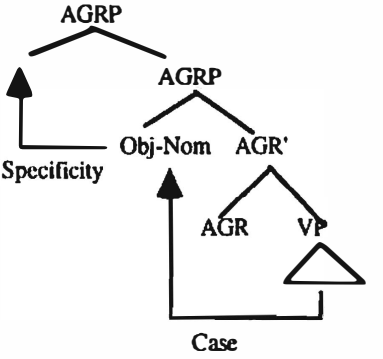

difference, however, is that since the dative object NP moves to a VP-external A-position (Bhatt & Anagnostopoulou 1996), I suggest these objects check "specificity" in the manner that nominative objects do —they move first to the Spec position and then move further up to the adjoined AGRP position to check the specificity feature. And since the second movement is a (very) short A-bar movement, reconstruction (to Spec) should be possible.

[18] The alternative is to claim that the specificity feature is checked by AGR as a free rider, whence comes the specific interpretation of nominative objects. This alternative is rejected for two reasons: (i) it introduces a complication in the grammar, viz., that there are two positions involved for checking the same feature, and (ii) we loose an account of what prevents nonspecific objects which trigger agreement checking the specificity feature.

6.2 SUBJECT POSITION

Let us begin by reminding ourselves of the canonical order of the nonsubject-initial clauses in Kashmiri. Kashmiri is a V2 language. When the subject is noninitial, it must immediately follow the finite verb, as shown in the contrast in (16) below.

(16a)

wunkin	chu	laRk	tsocyi
now	aux(m,sg)	boy(N)	breads(A,f)

khyvaan
eating

The boy eats bread(s) now.

(16b)

?*wunkin	chu	TSOCHYI	laRk
now	aux(m,sg)	breads(A,f)	boy(N)

khyvaan
eating

*The boy eats bread(s) now.
As for now, it is the bread that the boy eats (not rice).

If the object precedes the subject as in (16b), the sentence becomes marginal and for it to be interpreted the object requires secondary focal stress (indicated by upper case), suggesting that the object is in an (dislocated) A'-position. That our suggestion is essentially correct is borne out by the data in (16c) where the reflexive possessive in the direct object precedes the subject, yet it is bound by the subject. The interpretation possibility in (16c) indicates that the direct object containing the reflexive can be reconstructed, suggesting that it has moved to an A'-position, which we take to be a position adjoined to TP; this follows from the assumption that adjoined positions are A'-positions.

(16c)

az	chu	PANIN$_i$	TSOT	laRk$_i$	t$_i$
today	prs	self's	bread(A)	boy(N)	

khyvaan
eat-NPerf

The boy eats his bread today.

Accordingly, we draw two conclusions: (i) the canonical subject position in Kashmiri is the one immediately on the right of the verb-

second position in finite clauses which, given the Kashmiri clause structure (1), must be Spec-TP; and (ii) Spec-TP is an A-position by virtue of the reflexive-binding possibility (16c) from that position.

Next, I examine dative subject constructions. These constructions have generated a great deal of discussion, particularly with reference to the grammatical status of the dative nominal; i.e., whether it is a derived subject or an indirect object. In the following section, I will provide evidence for the claim that in Kashmiri the dative NP in DSCs is a derived subject; i.e., at S-Structure it is a subject, and crucially, not an indirect object.

6.2.1 Dative Subject (Psych) Constructions

In Kashmiri and a wide variety of other languages, there is a marked construction in which a thematically prominent NP associated, usually, with an Experiencer theta role and marked with a Case generally associated with the indirect object, occupies the subject position. Such constructions are known as Dative Subject Constructions (DSC) or Psych Constructions. Typically, the DSCs in Kashmiri are as follows (17).

(17a) [lokt-is bach-as paasan-hund nash aas-un]
small(D) child(D) money(G) proud have-Inf

chu-na jaan
aux-Neg nice

It is not nice for a little child to be so proud of money.

(17b) [tem-is kitaab raav-in] ch-aa mumkin
he(D) book(N,f,sg) lose-Inf(f) aux-Q possible

Is it possible for him to lose a book?

(17c) raath zaa-yi tem-is kuur
yesterday born(f,sg) she(D) girl(N)

Yesterday she had a girl (Lit. A girl was born to her yesterday).

(17d)

raath	zaa-v	tem-is	nechu
yesterday	born(m,sg)	she(D)	son(N)

Yesterday she had a son (Lit. A son was born to her yesterday).

(17e)

[laRk-as	yi yenaam	meel-un]	ch-u
boy(D)	this award	get-Inf	aux

pazpaaThyi	kamaal
really	wonder

The boy's getting this award is truly amazing.

(17f)

raath	myuul	laRk-as	yi
yesterday	got(m,sg)	boy(D)	this

yenaam
award(N,m,sg)

The boy got this award yesterday.

(17g)

raath	baas-yav	laRk-as	panun
yesterday	appear-Perf(m,sg)	boy(D)	self's

boy	beekal
stupid	brother(N)

Yesterday the boy felt his brother (to be) stupid.

In all of the sentences above, the nominal occupying the canonical subject position (which is the one immediately following the finite verb in finite clauses, or the initial position in nonfinite clauses) is marked with the overt morphological dative Case, and it does not trigger verb agreement. In fact the agreement is triggered by another nominal that has nominative Case. These constructions thus contrast with other constructions in Kashmiri like (18) where the clause-initial nominal is in the nominative Case and it controls verb agreement.

(18a) wunkin ch-u laRk kitaab
now aux(m,sg) boy(N) book(A,f,sg)

par-aan
read-NPerf

Right now the boy is reading the book.

(18b) wunkin ch-a kuur akhbaar
now aux(f,sg) girl(N) newspaper(A,m,sg)

par-aan
read-NPerf

Right now the girl is reading the newspaper

As mentioned earlier, DSCs are not limited to Kashmiri only. Similar constructions are also attested to in other languages. In (19) examples of a few are provided.

Imbabura Quechua (from Hermon 1985)

(19a) **(nuka-ta)** aycha-ta miku-naya-wa-n-mi
me(A) meat(A) eat-desid-1 OM-pr 3-val

I desire to eat meat.

Georgian[19] (from Harris 1984)

(19b) Turme **Rezo-s** ucukebia samajuri
apparently Rezo(D) gave-3s-it-evid bracelet

sen-tvis
you(Ben)

Apparently Rezo gave a bracelet to you.

[19] The Inversion construction in Georgian occurs in many verbs in the evidential (evid) mode, when the intention is to indicate that speakers lack evidence of the truth of their statement (see Harris 1984 for details).

Icelandic (from Zaenen et al. 1985)

(19c) **Henni** hefur alltaf þott Olafur
her(D) has always thought Olaf(N)

leiðinlegur
boring(N)

She has always thought Olaf boring.

Hindi

(19d) **laRke-ko** apnaa ghar yaad
boy(D) self's home(m,sg) memory(f)

aa-yaa
come-Perf(m,sg)

The boy remembered his home.

Kannada (from Sridhar 1976)

(19e) **avarige** siTTu bantu
he(D) anger came

He got angry.

The theoretical interest in such constructions is due mainly to the apparently ambiguous grammatical status of the dative nominal: it shows properties normally associated with subjects, however, it does not control verb agreement and its Case is lexically assigned.

6.2.1.1 Dative Subjects

Dative subjects have been analyzed by some as indirect objects and by others as derived subjects since they display mixed properties.[20] In this section, I take another look at the grammatical status of the dative nominals in DSCs in order to resolve the following question: Is the dative NP in a DSC a derived subject or an in indirect object? It is with respect to this questions that there is an ongoing debate in generative circles: one approach taken in Relational Grammar (RG) is to claim that the proper analysis of DSCs [=Inversion in RG] is subject lowering, known in RG literature as Retreat — the demotion of the initial 1 (=subject) to 3 (=indirect object) and the advancement of the initial 2

[20] For a recent discussion on the syntactic and semantic properties of dative subjects in different Indian languages, see Verma and Mohanan (1990).

(=object) to 1(=subject). A Government and Binding (GB) account, however, disallows retreat as the analysis of the Inversion phenomenon since such an analysis will lead to a violation of the Theta-Criterion — the subject moves from a theta (subject) position to another theta (indirect object) position resulting in a chain with two theta roles. The GB account, instead, requires the dative Experiencer to be either in chain with [Spec, IP] or, as Belletti and Rizzi (1988) have argued for the Italian psych verb *piacere*, the dative Experiencer moves to Spec-IP (=Advancement).[21] In fact, given the overall conceptual framework of the Government and Binding approach, the prediction is that retreats cannot be an option in Universal Grammar.

In the next section, I will show that dative subjects in Kashmiri must be analyzed as derived (S-Structure) subjects (Spec-TP), which supports the hypothesis that DSCs must assume a subject-raising ("Advancement") analysis. I will conclude this section by providing some more data from Icelandic and Quechua which further supports the hypothesis that the proper analysis of DSCs is raising (advancement), not lowering (retreat).

6.2.1.2 Dative Subjects in Kashmiri: "Raising" Arguments

In this section, I will provide evidence to claim that in Kashmiri the dative nominal is a subject at S-Structure, which, given the Kashmiri clause structure (1), is Spec-TP position. The following sets of arguments form the basis of my claim:
(i) derived subjects can float quantifiers (20)— dative nominals can float quantifiers (21); (ii) only derived subjects can be equi victims (22)— dative nominals can be equi victims (23); (iii) only derived subjects can control PRO or be PRO in Kashmiri *-ith* participial clauses (24)—dative nominal can be PRO or control PRO in Kashmiri *-ith* clauses (25); (iv) only derived subjects raise in subject-to-subject environments (26)— dative nominals raise to subject (27); (v) only derived subjects undergo raising to object in ECM constructions (28) — dative nominals appear as objects in ECM contexts (29).

6.2.1.2.1 Quantifier Floating

The data from quantifier floating in Kashmiri show that the dative NP in DSCs cannot be the D-Structure subject, as the lowering (retreat) analysis assumes. Although in Kashmiri subjects can float

[21] In the phrase structure given in (1) earlier, Spec-IP corresponds to Spec-TP.

quantifiers,[22] the data in (20) shows that only derived (S-Structure) subjects can float quantifiers, not the D-structure subjects. The grammaticality of (20a) suggests that subjects can float quantifiers. However, the ungrammaticality of (20c) and the grammaticality of (20b) support the claim that S-Structure (derived) subjects can float quantifiers, while the D-Structure subjects are unable to float quantifiers.[23]

(20a) koory-av vuch saaryivi raath laRk
girls(E) saw all(E) yesterday boy(N)

All the girls saw a boy yesterday.

(20b) laRkan aav saaryini lay-ni
boys(D) came all(D) hit-PASS

All the boys were hit.

(20c) *maasTar aav laRkav athyi saaryini laay-ni
teacher(N) came boys(D) by all(D) hit-Pass

The teacher was hit by all the boys (students).

The grammaticality of the DSC (21) below shows conclusively that the dative nominal is able to float quantifiers demonstrating, rather unequivocally, that these nominals are not D-Structure subjects.

(21) laRk-an baasyav saaryini raamesh
boys(D) felt all(D) Ramesh(N)

paagal
stupid

All boys took Ramesh to be stupid. (Lit. To all boys, Ramesh appeared stupid).

---

22 Objects can also float quantifiers, but the argument here is that when a subject floats quantifiers, it is the S-Structure subject, not the D-Structure subject, that is able to float quantifiers.

23 It may appear, as one of the anonymous readers pointed out, that the failure of quantifier floating is simply due to the fact that PP in Kashmiri is a bounding node for leftward NP movement. This observation is not accurate for Kashmiri since leftward NP movement out of PP is indeed possible as the data in (i) below shows:

(i) tem chu kamran saaryini manz kaaliin vahroov-mut
she(E) is rooms(D) all(D) in carpet lay-perf
She has laid (put) a carpet (down) in all the rooms.

The quantifier float data, however, does not show conclusively whether the dative NP is indeed the S-Structure subject or indirect object since indirect objects in Kashmiri can also float quantifiers, though with marginal acceptance, as shown in (22) below.

(22) ??laRk-an dits me saaryini haarI
boys(D) gave I(E) all(D) money(N)

I gave money to all the boys.

Next we look at some evidence that clearly shows that a dative NP in a DSC must be an S-Structure subject, not an indirect object.

6.2.1.2.2 Equi victims: Controlled PRO

The second argument of the derived subjecthood of dative nominals comes from the Equi constructions. In Kashmiri only derived subjects can be equi victims as the data in (23) shows. The grammaticality of (23a) indicates that subjects can be equi victims in Kashmiri. (23b) is ungrammatical in the intended reading, suggesting that indirect objects cannot be equi victims. (23c) is an instance of the passive of the complement verb *ratun* 'to catch' of (23a). The grammaticality of (23d) and (23e) suggests that a passive (derived) subject can be an equi victim. However, the ungrammaticality of (23f), on the other hand, shows the inability of deep subjects to be Equi victims, suggesting that only derived subjects can be equi victims, i.e., can act as Controllees.

(23a) raam-an rot laRk-as
Ram(E) caught boy(D)

Ram caught the boy.

(23a') raam-an$_i$ yotsh [PRO$_i$ laRk-as rat-un]
Ram(E) wanted boy(D,m,sg) catch-Inf

Ram wanted to catch the boy.

(23b) tem dyut me aashiirvaad
he(E) gave me(D) blessing(N)

He gave me the blessing.

(23b') *me$_i$ baasyav [temsund PRO$_i$ aashiirvaad
I(D) felt his blessing

dyun] yohay aajiib
give-Inf as if strange

His giving me the blessing felt strange (to me).

(23c) raamni-athyi chu laRk-as rat-ni
Ram-by prs boy(D) catch-pass

yiv-aan
come-NPerf

The boy was caught by Ram.

(23d) laRk-an$_i$ yotsh [raamni-athyi PRO$_i$
boy(E) wanted Ram-by

rat-ni y-un]
catch-pass come-Inf

The boy wanted to be caught by Ram.

(23e) raam chu jeel sooz-ni yivaan
Ram is jail sent-pass come-NPerf

Ram is sent to jail.

(23e') raam$_i$ chu-na yatshaan [PRO$_i$ jeel soz-ni
Ram aux-not wants jail sent-Pass

y-un]
came(m,sg)

Ram does not want to be sent to jail.

(23f) raamni-athyi chu laRk-as rat-ni yiv-aan
Ram-by is boy(D) catch-pass come-NPerf

The boy is caught by Ram.

(23f') *raam-an yotsh [PRO laRk-as rat-ni
Ram(E) wanted boy(D) catch-Pass

y-un]
come-Inf

Ram wanted the boy to get caught by him.

The data in (24) show that dative nominals can be equi victims; i.e., they can be controlled PRO (adapted from Syeed 1984).

(24) laRk chu-na [Ø sabak mashith gats-un]
boy aux-Neg lesson forget go-Inf

yetshaan
wants

The boy (student) does not want to forget the lesson.

6.2.1.2.3 Adverbial -ith Clauses

As the third argument, I present evidence from the facts of *-ith* participial clauses. The action indicated by the predicates of these embedded clauses is interpreted as occurring prior to the one expressed by the matrix predicate. The traditional term to refer to these participles is Conjunctive Participles (I indicate them in the data as CP). In Kashmiri only derived subjects can control PROs or become PROs in such clauses, as shown by the data in (25). Note especially that in (25a) the indirect object does not control PRO, while the ergat ve subject is able to control PRO. The data in (25b) shows that in a dative passive construction, the S-Structure (passive) subject, and not the D-Structure subject, can control PRO.

(25a) [$PRO_{i/*j}$ kitaab parith] dits maastar-an_i
book read-CP gave teacher(E)

aasyi$_j$ kaam
us(D) work

After the teacher read the book, he gave us work (to do).

(25b) [PRO$_{i/*j}$ kitaab parith] aayi aasyi$_i$ kaam
book read-CP came us(D) work

di-ni maastar-as$_j$ aathyi
give-Pass teacher by

After we read the book, we were given work .

In (26) below, I show that the dative nominal both controls PRO and becomes PRO. Using a psych predicate in the matrix clause as in (26a), I show that only the dative nominal *laRkas* controls PRO. This suggests that the dative NP in DSCs is clearly a derived (S-Structure) subject since only S-Structure subjects are able to control PRO (see 25b). The data in (26b) show that predicate *tsakh khasin* 'to become angry' is a psych predicate which takes a dative subject. In (26c) (adapted from Syeed 1984), the dative nominal is the controllee (becomes PRO), suggesting that the dative nominal in DSCs is a derived subject since only derived subjects, and crucially neither indirect objects (23b) nor D-Structure subjects (23f), can act as controlled PRO.

(26a) [PRO$_{i/*j}$ yi kath buuz-ith] peyi laRkas$_i$
this story hear-CP fell boy(D)

maaj$_j$ yaad
mother(N) memory

After the boy heard this story, he remembered (his) mother.

(26b) tem-is khats tsakh yelyi tem yi
he(D) climbed anger(N,sg) [when he(E) this

shesh buuz
news(N) heard]

He got angry when he heard this news.

(26c) [PRO$_i$ tsakh khas-ith] tul laRkan$_i$ shor
anger climb-CP lifted boy(E) noise

After the boy got angry he raised hell.

6.2.1.2.4 Subject-to-Subject Raising

The fourth argument is based on the facts of Subject-to-Subject Raising. In Kashmiri, only derived subjects can be raised, as shown in (27). The grammaticality of (27a) and the ungrammaticality of (27b) follows from the fact that subject-to-subject raising is possible only when the subject raised to matrix subject position is itself a derived subject.

(27a) kuur cha basaan vuch-ni aa-mets
girl aux seems saw-Pass come-Perf

The girl seems to have been seen.

(27b) *mastar-as chu basaan kuur aayi vuch-ni
teacher aux seems girl came saw-Pass

(tem sin zeryi)
(by him)

The teacher seems the girl was seen.

Dative nominals also raise to subject as the data in (28) shows, suggesting, once again, that the dative NP is an S-Structure subject.

(28) laRk-as$_i$ cha basaan [t$_i$ boch laj-mets]
boy(D) aux seems hunger feel-Perf

The boy seems to be hungry.

6.2.1.2.5 ECM Constructions

Finally, there is conclusive evidence to claim that in Kashmiri only derived subjects undergo raising to object in ECM constructions, as the contrast in (29) indicates. When the D-structure subject is raised, as in (29a), the sentence is ungrammatical. However, when the derived (S-Structure) subject is raised to object position, as shown in (29b), the sentence is grammatical, suggesting that only derived (S-Structure) subjects can raise in ECM contexts, not the deep subjects.

(29a) *asyi vuch raam tsuuNTh kini-ni
we saw Ram apples sell-Pass

yiv-aan
come-NPerf

We saw Ram being able to sell apples (Lit. We saw Ram by whom the apples were being sold).

(29b) asyi vuch-na kitaabI kini-ni yiv-aan
we saw-not books sell-Pass come-NPerf

We did not see the books being sold.

Dative nominals appear as objects in ECM contexts, as shown by the data in (30), suggesting that they are S-Structure subjects.

(30a) tem vuch-na dod-as$_i$ [t_i grakh yivaan]
he(E) saw-Neg milk(D) boil come-prs-prt

He did not see the milk boiling/coming to a boil.

(30b) me vuch-na tem-is$_i$ [t_i shalakh pyavaan]
I(E) saw-Neg he(D) beat fall-prs-prt

I did not see him being beaten.

Summing up, so far I have established that dative NPs in DSCs are derived (surface) subjects. What has not been discussed is where these dative NPs are generated at D-Structure. In the next section, evidence will be presented to show that dative nominals arise as indirect objects (and subsequently move to the subject position).

6.2.1.3 Dative NP: D-Structure Indirect Object

In this section two arguments will be presented to claim that the proper analysis of dative nominals in DSCs must assume that they are base-generated as indirect objects.

6.2.1.3.1 Case

In Kashmiri, as in other Indic languages, indirect objects are always Goal arguments marked with a dative Case. Dative Case is an inherent Case, assigned at D-Structure and associated with theta marking by the uniformity condition. The only other argument which appears with the

dative Case is the Theme/Patient argument under specificity conditions (compare (31a) and (31b) below). However, in Kashmiri, a dyadic verb never marks both its objects as dative in a double object construction even if the Theme argument is specific, as shown by the contrast in (31c) and (31d) below.

(31a) swa cha pany-is shur-is naad
she(N) is self's(D) child(D) call

div-aan
give-NPerf

She is calling her child.

(31b) *swa cha panun shur naad
she(N) is self's(A) child(A) call

div-aan
give-NPerf

She is calling her child.

(31c) *tɛm wakht oos puliiswool maaj-yi panyis
that time was policeman(N) mother(D) self's(D)

shur-is vaapas div-aan
child(D) return give-NPerf

At that time the policeman was returning the child to his mother.

(31d) tɛm wakht oos puliiswool maaj-yi panun
that time was policeman(N) mother(D) self's(A)

shur vaapas div-aan
child(A) return give-NPerf

At that time the policeman was returning the child to his mother.

In (31a), the Theme argument, the direct object, is interpreted as specific, and therefore it must appear in the dative Case. The ungrammaticality of (31b) shows that a specific direct object cannot appear in the accusative Case. Notice, however, that even though the

direct object in the double object construction like (31c) is specific, it cannot appear in the dative Case, which is reserved, as it were, for the Goal argument. The grammaticality of (31d) indicates that the theme must appear in the accusative Case, even with a specific interpretation.

The only argument that appears with the dative Case in double object constructions is the Goal argument, the indirect object. We will present arguments later in this chapter to claim that the dative NP in a DSC is the Goal argument (the entity toward which action is directed). If so, then it is reasonable to assume that the D-Structure position for both the dative NP in DSCs and the indirect object in double object constructions must be the same. One consequence that emerges from this assumption is that in Kashmiri, the dative (inherent) Case is uniformly assigned under government to the Goal argument by the verb at D-Structure.[24] For the data in (31a) and (31b), a further assumption must be made: in the absence of a Goal argument, a verb may optionally assign inherent dative to the theme argument to fulfill some interpretive requirements, e.g., that dative themes be interpreted as specific NPs as opposed to generic NPs (as discussed earlier in chapter 2).

6.2.1.3.2 Passivization

The second argument in support of the claim that dative nominals are base-generated as indirect objects comes, indirectly though, from the incompatibility of psych predicates and passivization. The logic of the argument (symmetry, parallelism) is as follows: the assumption that goal arguments are universally base generated as indirect objects makes correct predictions about the movement possibilities in both dative passive (32a') and dative subject constructions (32b') — both involve the movement of the indirect object to the subject position (the symmetry argument). If DSCs involve movement of the indirect object to the subject position, then the prediction is that these constructions should not yield (dative) passives because there will be no subject position available as the landing site for the (passive) movement. In non-DSCs, on the other hand, passivization should be an option since the subject position is empty, unoccupied, as it were. This prediction is in fact borne out. Compare the data in (32a') with (32b'). Note the superficial similarity of the structure of the two sentences, yet (32a') is grammatical whereas (32b') is ungrammatical. (32a') is an example of

[24] Belletti and Rizzi (1988) have made a similar claim for the dative experiencers of Italian psych verbs, viz., that they are inherently Case marked. Similar suggestions are made for Icelandic quirky subjects (see Cowper 1988, Marantz 1991, among others).

dative passive (cf. 32a) in a non-V2 clause suggesting that indirect objects (dative NPs) in Kashmiri can be passivized. However, the passivization of the psych predicate (*khar-un* 'dislike') yields ungrammaticality (32b') as predicted.

(32a) humis laRk-as cha yi kamiiz dini
that boy(D) is this shirt(N) give-pass

yivaan
come-prt

That boy is given this shirt.

(32a') raam-an vuch [humis laRk-as yi kamiiz
Ram(E) saw that boy(D) this shirt(N)

di-ni yiv-aan]
give-Pass come-prt

Ram saw that boy being given this shirt.

(32b) humis laRk-as cha yi kuur khar-aan
that boy(D) is this girl(N) hate-NPerf

That boy hates this girl.

(32b') *raam-an vuch [humis laRk-as yi kuur
Ram(E) saw that boy(D) this girl(N)

khar-ni yiv-aan]
hate-Pass come-prt

Ram saw that boy being hated the girl.

Assuming passivization in Kashmiri involves (raising) movement of the object NP to the subject (Spec-TP) position, the grammaticality of (32a') follows straightforwardly: the dative NP moves to the empty subject position yielding a dative passive construction. The ungrammaticality of (32b') can also be accounted straightforwardly if we assume that dative NPs, like other goal arguments, originate as indirect objects in DSCs and are then subsequently raised to the subject position. The ungrammaticality of (32b') arises from the fact that the required structural description for passive is not available: the passivization in DSCs is blocked since there is no empty subject position left to which dative NP can move. The ungrammaticality of

(32b'), in fact, confirms that dative NPs are generated as indirect objects in DSCs and are then subsequently raised to the subject position at S-Structure.

The data investigated in the above sections (6.2.1.2 and 6.2.1.3) lead to the conclusion that a straightforward account of dative NPs in Kashmiri DSCs must assume a raising analysis: movement from the indirect object position to the subject position. This S-Structure (derived) subject position must be the Spec of TP, as argued earlier in section 6.2. In (33) below, I show that the same contrast obtains with dative subjects as noticed earlier for nominative subjects (see (12) earlier): the subject of the clause must immediately follow the finite verb, suggested by the awkwardness of (33b). The position immediately following the finite verb, given the structure in (1), is Spec of TP.

(33a) raat khyuth cha tem-is maaj yaad
night time prs-f,sg he(D) mother memory

pyav-aan
fall-NPerf

At night he remembers his mother.

(33b) ?*raat khyuth cha MAAJ tem-is yaad
night time prs-f,sg mother he(D) memory

pyav-aan
fall-NPerf

It is at night, that it is the mother he remembers.

The data in Kashmiri (20-33) thus overwhelmingly supports a raising to subject analysis of dative NPs in DSCs.[25] In the next section, I briefly discuss Icelandic and Quechua to claim cross-linguistic empirical support for the Raising-to-Subject analysis of

[25] However, two (one relatively recent) retreat analyses of dative subjects in Indic languages have been persuasively argued; one for Kannada, a Dravidian language analyzed by Sridhar (1979), and the other for Marathi, an Indo-Aryan language analyzed by Rosen and Wali (1989). Within the GB framework, however, the existence of retreats is somewhat problematic; movement from one theta position to another is disallowed by the theta criterion. In Bhatt (1991), all the major pieces of evidence in favor of the retreat analyses of Kannada and Marathi are reviewed, and it is concluded that none of them are compelling. I claim that although dative subjects in these languages can be analyzed as retreats, they, however, do not require a retreat analysis.

DSCs.

6.2.1.4 Additional Evidence

To conclude the discussion of the grammatical status of dative subject, I present some more evidence from Icelandic (Zaenen, Maling & Thráinsson 1985, Andrews 1990) to claim that DSCs must be analyzed as raising to subject position, along the lines proposed for Kashmiri. The Experiencer nominal in (34) to (37) is known to be associated with, by and large, the following subject properties:

(i) They can antecede subject-oriented reflexives as shown below in the Icelandic example (taken from Zaenen, Maling & Thráinsson 1985):

(34a)

Sigga	barði	mig	með	dukkuni
Sigga(N)	hit	me(A)	with	doll(D)

sinni/*hennar
her (*[-REFL])

Sigga hit me with her doll.

(34b)

Eg	barði	Siggu	með	dukkuni	hennar/*sinni
I	hit	Siggu	with	doll	her (*[+REFL])

I hit Sigga with her doll.

(34c)

Henni	þykir	bro ir	sinn/*hennar
her(D)	thinks	brother(N)	her (*[-REFL])

leiðinlegur
boring

She thinks her brother boring.

(ii) They raise in ECM contexts as shown in the Icelandic example below:

(35) Eg tel Henni hafta alltaf þott
I believe her(D) to-have always thought

Olafur leiðinlegur
Olaf(N) boring(N)

I believe she has always thought Olaf boring.

(iii) They can become PRO in appropriate contexts as shown in the Quechua example below (from Hermon 1985):

(36) Nuka-ta$_i$ [PRO$_i$ puNa-naya-y]-ta
I(A) [sleep-desis-inf](A)

kati-ju-rka-ni
continue-prog-past-1

I continue to want to sleep.

So, what we see in the above examples is that the thematically prominent experiencer argument is the (derived) subject, not the indirect object. It is, however, marked with a Case generally associated with the indirect object.

6.2.1.5 Conclusions

In this section, arguments were presented to claim that dative NPs in DSCs are derived subjects. Further, it was claimed that a proper analysis of dative subjects involves raising to subject position. The claim that dative nominals in DSCs must be analyzed as derived subjects was based on, among other things, the ability of dative subjects to float quantifiers, control or become PRO, and raise in subject-to-subject and ECM contexts. Further, evidence in favor of retreats offered in recent literature for languages such as Marathi and Kannada was reviewed, and the conclusion was drawn that none of the retreat analyses is compelling. Finally, some more cross-linguistic data of DSCs was offered to show that dative NPs in DSCs are S-Structure subjects, which further supports a raising analysis and, at the same time, casts doubt on the existence of retreats in Universal Grammar.

6.2.2 Ergative Subject Constructions

The ergative NP, in (37a) for example, though bearing a non-nominative Case is the uncontroversial subject of the clause: it controls

PRO and is controlled PRO (37b), raises in subject-to-subject (37c), etc.

(37a) ram-an kar panin kaam
Ram(E) do-Perf(f,sg) self's work(N,f,sg)

khatam
finish

Ram finished his work.

(37b) ram-an$_i$ kar [PRO$_i$ shraan kar-ith]
Ram(E) do-Perf(f,sg) bath do-CP

pooza
prayer(N,f,sg)

Having bathed, Ram prayed.

(37c) ram-an$_i$ chu$_j$ [t_i t_j batl
Ram(E) prs(m,sg) food(m,sg)

khyo-mut] baasaan
eat(m,sg)-part appears

Ram appears to have eaten food (dinner) [Lit.: It appears that Ram has eaten dinner].

It is important to note that ergative Case, always associated with the agent theta role, only appears with the subject NP; it never appears with any other grammatical function. Further, in nonsubject-initial clauses these NPs must immediately follow the finite verb as shown by the contrast in (38) below. (38b) is marginally acceptable with (secondary) focal stress on the object, indicating that the object is in a dislocated position. Given the Kashmiri clause structure (1) earlier, the contrast in (38) suggests that subjects of transitive perfect predicates, always marked with an ergative Case,[26] occupy the Spec of TP position.

---

[26] Some intransitive perfect predicates also require ergative subjects as shown in (i) and (ii) below.

(i) tem/*su vod
he(E) cried
(ii) tem/*su os
he(E) laughed.

(38a) raath kar laRk-an skuul-ic kaam
yesterday did boy(E) school(G) work

khatam
finish

Yesterday, the boy finished the homework.

(38b) ?*raath kar SKUUL-IC KAAM laRk-an
yesterday did school(G) work boy(E)

khatam
finish

As for yesterday, it was the homework that the boy finished.

There are certain properties that ergative subjects share exclusively with nominative subjects and certain others that they share with dative subjects. For example, unlike nominative subjects, but like dative subjects, ergative subjects do not trigger predicate agreement, which is triggered by a nominative object, if there is one, as shown in (39).

(39) laRk-av kheyi tsoT
boys(E) ate(f,sg) bread(N,f,sg)

The boys ate bread.

But the similarities between ergative and dative subjects in Kashmiri cease here. There are three crucial syntactic differences between ergative and dative subjects to which I turn next.

I offer no explanation of this alternation, except noting them here and tentatively assuming that perhaps intransitive perfect predicates requiring volitional/conscious participation on the part of the subject assign ergative Case to their subjects. This gives a nice contrast of (i) and (ii) in (iii) and (iv). I, however, do not investigate this asusmption any further.

(iii) su/*tem shong
he(N) slept

(iv) su/*tem muud
he(N) died

6.2.2.1 Passivization

The passive in Kashmiri is expressed by suffixing the passive morpheme *-ni* to the verb root, and adding a periphrastic auxiliary *yun* 'to come,' as shown in the active-passive pair below. The oblique *by*-phrase in Kashmiri is preferably omitted.

(40a)

laRk	ch-u	kor-yan	kitaab
boy(N)	prs-m,sg	girls(D)	book (A,f,sg)

div-aan
give-NPerf

The boy gives a book to the girls.

(40b)

kitaab	ch-a	kor-yan	di-ni
book(N,f,sg)	prs-f,sg	girls(D)	give-Pass

yiv-aan	(laRk-as athyi)
came-NPerf	(boy(D) by)

The book was given to the girls (by the boy).[27]

(40c)

kor-yan	ch-a	kitaab	di-ni
girls(D)	prs-f,sg	book(N,f,sg)	give-Pass

yiv-aan	(laRk-as athyi)
came-NPerf	(boy(D) by)

The girls were given the books (by the boy).

---

[27] There are two other agentive markers (*by*-phrases) in Kashmiri: *zaryi*, and *dasyi*. There is very little difference, if any, in the use of the three oblique agentive markers. Thus we could form a passive using any combination, as shown in (i-iii) below:

(i)

tas	athyi	aayi	palav	chal-ni
he(D)	by	came	clothes	wash-Pass

The clothes were washed by him.

(ii)

tasind	dasyi	aayi	palav	chal-ni
he(G)	by	came	clothes	wash-Pass

The clothes were washed by him.

(iii)

tasind	zaryi	aayi	palav	chal-ni
he(G)	by	came	clothes	wash-Pass

The clothes were washed by him.

Kachru (1973:353) notes the existence of intransitive passives in Kashmiri. It turns out that only unergative verbs can passivize giving rise to the so-called impersonal passive (looking) constructions. However, unaccusative verbs do not passivize, as the contrast between (41) and (42) shows.[28]

(41a) laRk oos kamr-as manz nats-aan
boy(N) was room(D) in dance-NPerf

The boy was dancing in the room.

(41b) laRk-as athyi oos kamr-as manz nats-ni
boy(D) by was room(D) in dance-Pass

yiv-aan
come-NPerf

It was in the room danced by the boy.

(42a) shuryi chI yath umr-yi manz jal-jal
kids are this(D) age(D) in very fast

baD-aan
grow-NPerf

The kids grow very fast at this age.

(42b) *shury-an athyi chu yath umr-yi manz
kids(D) by is this(D) age(D) in

jal-jal baD-ni yiv-aan
very fast grow-Pass come-NPerf

At this age it is very fast growth by the kids.

---

[28] The same contrast obtains in other Indo-Aryan languages, e.g., in Hindi:

(ia) bacca so-yaa
boy slept
The boy slept.

(ib) bacce se soyaa gayaa
boy by slept went
It was slept by the boy.

(iia) bacca gir-aa
boy fell
The boy fell.

(iib) *bacce se giraa gayaa
boy by fell went
It was fell by the boy.

A plausible hypothesis to account for the contrast in (41) and (42) is to assume that in Kashmiri, operations such as passivization require an external argument. This will straightforwardly explain why passivizing an unaccusative verb results in ungrammaticality (42b, above): there is no external argument in these structures.

If the above hypothesis is correct, and assuming dative predicates to be unaccusatives, we expect constructions with dative Case-marked subjects to result in ungrammaticality when they are passivized. Indeed, the ungrammaticality of (43b) supports our hypothesis.

(43a) laRk-as ch-a yi kitaab khar-aan
boy(D) prs-f,sg this book(N,f,sg) hate-NPerf

The boy hates this book.

(43b) *yi kitaab ch-a khar-ni
this(N) book(N,f,sg) prs-f,sg hate-Pass

yiv-aan
come-NPerf

This book is being hated.

However, constructions with ergative Case-marked subjects can easily passivize, as shown in (44). If we maintain our hypothesis, we must assume that the subject of the perfect predicate is an external argument. Clearly, with respect to passivization, ergative subject constructions pattern with nominative subject constructions ((40) earlier); they both can have passive counterparts.

(44a) laRk-an par yi kitaab
boy(E) read-Perf-f,sg this book(N,f,sg)

The boy read this book.

(44b) yi kitaab aa-yi
this(N) book(N,f,sg) come-Perf-f,sg

par-ni
read-Perf-Pass

This book was read.

Next we look at some more data which leads to the same conclusions; that subjects of dative predicates are internal arguments

whereas subjects of perfect predicates are external arguments.

6.2.2.2 Nominalization

One of the most productive way of deriving nominals from verbs is by suffixing the gerundive *-un* (homophonous with the infinitive marker) to the verb root. The resulting deverbal noun takes all the arguments taken by the verbs they are derived from. Thus, nominalizing (45a) this way yields (45b).[29]

(45a) laRk chu dohay baat gyavaan
boy(N) prs daily songs sing-NPerf

The boy sings songs every day.

(45b) [laRk-sund dohay baat gyav-un] chu-na
boy(G) daily songs sing-ing prs-Neg

mastar-as pasand
teacher(D) like

The teacher does not like the boy's singing of the songs every day.

As with passivization, nominalization of ergative predicates is possible, as shown in (46a). The nominalization of psych predicates, however, yields ungrammaticality, as shown in (46b).

(46a) laRk-sanz yi kitaab par-in
boy-(G) this book read-Nominalizer

The boy's reading this book...

(46b) *laRk-sinz yi kitaab khar-in
boy-(G) this book hate-Nominalizer

The boy's hating this book...

Once again, to account for the contrast between (45) and (46), we can maintain our hypothesis and claim that the underlying structure of nominative subject constructions must be the same as ergative subject constructions; specifically, that both have an external argument, which is lacking in the dative subject constructions.

---

[29] These gerundive (*-ing*) nominals are generally believed to be complex events (Grimshaw 1990).

And, as a final piece of evidence, I provide data from causativization in Kashmiri to show that ergative subject constructions pattern with nominative subject constructions forcing an account of perfect predicates that must assume an underlying structure different from dative subject constructions and the same as nominative subject constructions.

6.2.2.3 Causativization

In Kashmiri, causative constructions are formed by a general process of suffixing the causative morpheme *-inaav* to the main verb, as shown in (47a) and (47b). The causer (generally the agent) has some intermediary (causee), marked with the same postposition (*athyi* 'by') as the passive *by*-phrase, actually perform the action for it.

(47a)

su	ch-u	me	mastar-as athyi	hindi
he(N)	prs-m,sg	me(D)	teacher-(D)-by	Hindi(A)

par-inaav-aan
read-Cause-NPerf

He is having the teacher teach me Hindi.

(47b)

su	ch-u	mohnyu-as athyi	kaam
he(N)	prs-m,sg	servant-(D)-by	work(A)

kar-inaav-aan
do-Caus-NPerf

He is having the servant do the work.

As is the case with other (oblique) adjunct phrases, the oblique causee can be omitted: I show this in (48) below.

(48)

su	ch-u	kaam	kar-inaav-aan
he(N)	prs-m,sg	work(A)	do-Caus-NPerf

He is having the work done.

The ergative subject constructions can be causativized by a general process of suffixing the causative morpheme *-inaav* to the main verb, as shown in (49a), whereas the dative subject constructions fail to undergo causativization, as the ungrammaticality of (49b) suggests.

(49a)	asyi	kar-inaav	swa	laRk-as-athyi	kaam
	we(E)	do-CAUSE	she	boy(D)-by	work

We had her do the work by the boy.

(49b)	*asyi	khar-inaav	swa	kuur	laRkas-athyi
	we	hate-CAUSE	that	girl(N)	boy(D)-by

We had her hated by the boy.

Once again, I suggest that the contrast in (49a) and (49b) follows from the underlying structural differences between perfect predicates and dative predicates.

6.2.3 Summary

So far we have seen that subjects of finite clauses in Kashmiri move to Spec of TP at S-Structure. This position, as argued in section 6.2.1, is an A-position. Earlier in section 6.1, I argued that nominative objects move to Spec of AGRP, and this position, too, was argued to be an A-position. Thus, there are two positions immediately above the VP projection, AGRP and TP, the Specs of which can host, as argued in the above sections, objects and subjects, respectively.

We noticed in section 6.1 that nominative objects move out of VP to AGRP-Spec in only those instances when the verb is a nonstructural Case assigner, e.g., a perfect predicate or a psych predicate, both unaccusatives. I hypothesize that subjects move to Spec-TP for the same reason: they need structural Case. The standard Case-theoretic approach to NP-movement (Chomsky 1981, 1986a), however, cannot motivate movement of Case-assigned NP to subject position: an NP crucially moves from a non-Case position to a Case position to meet Case Filter requirements This approach is immediately refuted by non-nominative NP movement, already discussed in sections 6.2.1 and 6.2.2. In the remainder of this chapter, I will explore just what kind of Case theory can give a principled account of the distribution of nominative subjects and objects as well as nonnominative subjects and objects.

6.3 CASE THEORY

I first present, in section 6.3.1, some salient aspects of Chomsky's Checking Theory. In the next section, 6.3.2., I show how Checking Theory is unable to honor Kashmiri Case generalizations. Then in

section 6.3.3., I present a restrictive theory of Case which is able to account for the distribution of Case in Kashmiri. And finally I demonstrate, in section 6.3.4., how my account of Case generalizes over to other languages, especially those that have "quirky" constructions.

6.3.1 Checking Theory: Chomsky (1991/1993)

I will briefly summarize here some relevant theoretical assumptions of Chomsky's framework, and then show empirical inadequacies of his framework in handling cross-linguistic generalizations of Case. The basic clause structure of all languages is assumed to be AgrSP-TP-AgrOP-VP, as shown in (50).

(50)

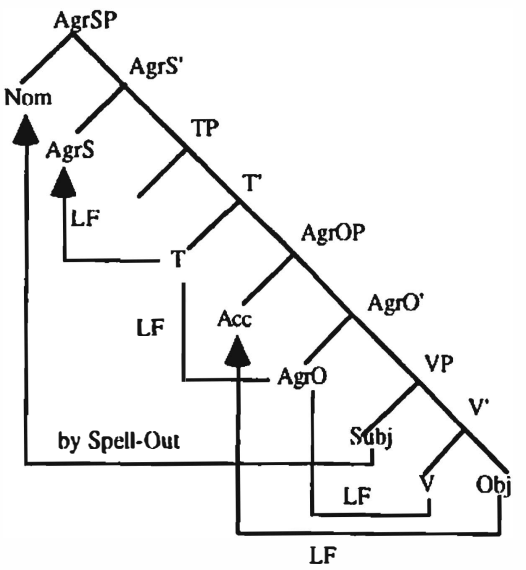

The thematic relationships are assigned by the verb to its arguments inside VP. The syntactic (Case and phi) feature relationships are established above VP in the functional projections. All syntactic feature relationships are established in a structural configuration known as the checking domain which, for our purposes, can be understood as the Spec-Head configuration: Head government plays no role in this framework. The head of T(ense) determines the Case properties of the

subject position, whereas the AgrS head establishes subject-verb agreement in its projection. AgrOP is the projection where the accusative Case (and object agreement) is licensed, presumably at LF. Finally, sentences are well-formed if all syntactic features that need to be checked are checked prior to Spell Out (SS) if strong, or at LF if weak. Strong Case features when checked are "erased" and therefore inaccessible (and invisible) to the computation at LF (Chomsky 1995).

6.3.2 Kashmiri Case: Problems for Checking Theory

In Chomsky's theory (1993), the contrast in (51) and (52) is explained by the fact that in (51) the DP John is able to check the nominative Case in the AgrSP projection of the upper clause: nominative Case is a function of finiteness. In (52), the DP John is left Caseless in the lower nonfinite clause.

(51) John is expected to pass the exam.
(52) *It is expected John to pass the exam.

Although this theory is able to correctly predict the well-formedness of a Kashmiri Passive sentence like (53), there are, however, several cross-linguistic empirical problems with Chomsky's Case theory. I will present empirical evidence that seriously challenges three of Chomsky's theoretical assumptions: (i) subject and/or object (A-) movement takes place for Case/feature checking; (ii) nominative Case, being a function of finiteness, is checked by the subject in Spec-AgrSP or in Spec -TP in overt syntax; (iii) Spec-AgrOP checks accusative Case at LF.

(53a) wunkin chu maasTar yim
now prs-m,sg teacher(N,m,sg) these

kitaab parnaavaan
books(A,f,pl) teaches

The teacher teaches these books right now (at this time).

(53b) wunkin cha yim kitaab
now prs-f,pl these books(N,f,pl)

parnaavnI yivaan (maasTaras athyi)
teach-Pass comes teacher by

These books are being taught now (by the teacher).

There is evidence in Kashmiri that A-movement is not driven by Case. The theme NP object in the Kashmiri Active voice (54a), unlike (53a) above, has dative Case assigned to it, and yet it moves to the subject position in Passive (54b).

(54a) az vuch tem koryi
today saw he(E) girl(D)

Today he saw the girl.

(54b) az av koryi vuch-nI (temsin-dasyi)
today came girl(D) see-Pass him-by

Today the girl was seen (by him).

Consider further the data in (55a). The data in (55a) show that the need to move to the subject position does not reside with the object since any of the two objects can successfully Passive-move to the subject position, as shown by the grammaticality of (55b) and (55c).

(55a) az dits maasTar-an yim-an laRk-an
today gave teacher(E) these(D) boys(D)

kitaab
book(N)

Today the teacher gave these boys a book.

(55b) az aayi yim-an laRk-an kitaab dinI
today came these(D) boys(D) book(N) give-Pass

Today these boys were given a book.

(55c) az aayi kitaab yim-an lark-an dinI
today came book(N) these(D) boys(D) give-Pass

Today a book was give to these boys.

Finally, consider (56): the subject of the lower Passive clause has been raised, via Subject-to-Subject raising, to the subject position of the matrix predicate (AgrSP, in the Chomskyan framework). None of the two A-movements, however, Passive in the lower clause and the S-S-R, were driven by the need to get Case because the moved NP had Case all along.

(56) laRk-as$_i$ chu basaan [t_i laay-nI aa-mut t_i]
boy(D) prs seems hit-Pass came-prt

The boy seems to have been hit.

That A-movement is not necessarily Case-related is also evidenced in Icelandic (cf. Andrews 1990, Freidin & Sprouse 1991, Burzio 1995, among others). In the Icelandic Passive (57b), A-movement occurs even when there is clearly no need for Case: the dative Case of the indirect object is inherently assigned in its D-structure position (cf. Freidin & Sprouse 1991, Burzio 1995). The Passive sentence (57c), however, shows that the other object can also A-move (Passivize), presumably for Case-theoretic reasons.

(57a) Ég syndi henni bílinn
I(N) showed her(D) the car(A)

(57b) Henni var syndur billinn
her(D) was shown the car(N)

(57c) Bíllinn var syndur henni
the car(N) was shown her(D)
(Freidin & Sprouse 1991:406)

With respect to nominative objects, however, Kashmiri differs from Icelandic in that in Kashmiri there is no third person restriction on nominative, as evidenced in the data below (58a-58d):

(58a) me vach swa az vaahrya kaalyI
I(E) saw she(N) today after a long time

I saw her today after a long time.

(58b) me vachmav tohyi az vaahrya kaalyI
I(E) saw you(N,pl) today after a long time

I saw you all today after a long time.

(58c) me vuchmak tsI az vaahrya kaalyI
I(E) saw you(N,sg) today after a long time

I saw you today after a long time.

(58d) tem vachi asyi az vaahrya kaalyI
he(E) saw we(N) today after a long time

He saw us today after a long time.

The second assumption of Case in Chomsky (1991/1993) is that nominative Case, being a function of finiteness, is checked by the subject in Spec-AgrSP (or in Spec-TP) in overt syntax, i.e., before Spell-Out. First, there is evidence in Kashmiri that nominative Case is indeed assigned (checked) in infinitival clauses; second, there is strong robust evidence that the theme object NP in quirky subject constructions is assigned nominative Case in a functional projection above VP but, crucially, below TP, a position that corresponds to Chomsky's (1993) AgrOP.[30]

In Kashmiri, infinitival clauses do appear with nominative Case assigned to (checked by) any argument NP which does not have inherent Case, as shown in (59a). When the dative subject construction (59a) — dative (Experiencer) subject/nominative (Theme) object — is embedded under a verb like *teach*, as in (59b), we find that the theme NP of the embedded verb still appears as nominative. Notice also, that the subject of the finite clause (59a) is nonnominative, whereas the object is nominative. Such constructions were discussed in detail earlier in sections 6.2.1 and 6.2.2.

(59a) yemis cha gaaDI raninyi
he(D) is fish(N,f,pl) cook-Inf-f,pl

He has to cook fish(es).

(59b) ba ch-us [yemis gaaDI ran-in-yi]
I(N) is-1ms he(D) fish(N,f,pl) cook-Inf-f,pl

hechnaav-aan
teach-prt

I am teaching him to cook fish(es).

[30] For cross-linguistic support of this claim, see, among others, Burzio (1995) for Italian, Schütze (1996) for Icelandic, Dubinsky (1992) for Japanese, and Mahajan (1991) for Hindi.

(59c) myon mool chu-na [pani koryi tim
my father(N) is-NEG self's daughter(D) those

laRk haavanyi] yatsh-aan
boys(N) show-Inf-m,pl want-prt

My father does not want to show those boys to his daughter.

Before closing the discussion in this section, I present another linguistically significant generalization about nominative Case and agreement facts in Kashmiri. Earlier, with respect to data in (59a), I claimed that infinitival clauses do allow nominative NPs. The evidence in Kashmiri, thus, points to the fact that it is Agr, and not Tense, that is responsible for nominative Case. As opposed to the agreeing infinitival clauses, like (59a), where the nominative is assigned, there are, in Kashmiri, nonagreeing infinitival participial clauses where no nominative is assigned and the participle shows no agreement. Thus, in Kashmiri, when a sentence like (60a) is embedded under a verb like *see* as in (60b), the subject of the lower clause appears with dative Case, and the subject of the matrix clause appears with nominative Case and controls agreement. (60c) is ungrammatical since nominative Case is not an option for the subject of the lower clause.

(60a) swa ch-a dohay batI khyv-aan
she(N) prs-f,sg daily rice(A) eat-NPerf

She eats rice everyday.

(60b) ba chus temis dohay batI khyv-aan
I(N) prs-1,m,sg her(D) daily rice(A) eat-prt

vuch-aan
see-NPerf

I see her eating rice everyday.

(60c) *ba chus swa dohay batI
I(N) prs-1,m,sg she(N) daily rice(A)

khyv-aan vuchaan
eat-prt see-NPerf

I see her eating rice everyday.

The generalization that emerges from data such as (60a) is that nominative Case is assigned/licensed/checked in an Agr projection, above VP (cf. section 6.1). Further, I hypothesize that participial infinitives in Kashmiri do not project an Agr, and therefore no nominative is available in these clauses. Iatridou (1990), King (1994), Fukui 1995, and Shlonsky (1996) have come to roughly similar conclusions about the projection of Agr: project only when required.[31]

The empirical support for this hypothesis comes from the grammaticality contrast between (60c) and (61). (60c) is banned, as discussed above, because the subject of the lower clause appears with (presumably) nominative Case, which is not a possible option since the AgrP projection in the lower clause is not available, by hypothesis. The grammaticality of (61), however, suggests that subjects of embedded infinitival clauses can in fact surface with nominative Case, in what appears to be the case of "Exceptional Nominative Case Marking." In these constructions, the subject of the infinitival clause occupies the matrix Spec-AgrOP, a conclusion forced by the empirical fact that the subject of the lower (infinitival) clause triggers agreement with the predicate of the upper (matrix) finite clause, as shown in (61). Since the matrix subject has ergative Case, the nominative is still available, I claim, in the Agr projection.

(60c) *ba chus swa dohay batI
I(N) prs-1,m,sg she(N) daily rice(A)

khyv-aan vuchaan
eat-prt see-Nperf

I see her eating rice everyday.

(61) tem vach swa$_i$ [t$_i$ dohay batI
he(E) saw-f,sg she(N) daily rice(A)

khyv-aan]
eat-prt

I saw her eating rice everyday.

The generalization that emerges from data in (60c) and (61) is that in those clauses where there is only one source of nominative, the functional head with the nominative Case feature must have the

[31] The intuitive idea is that AgrP projections exist to enable the checking of morphological features in the sense of Chomsky (1993). However, when there are no agreement features that require checking, the relevant AgrP is not projected.

structural property that either a subject or an object is able to check it.

The Case generalizations we noticed above for Kashmiri are summarized in (62).

(62)

(i) Quirky (nonnominative) subjects appear in exactly the same position as nominative subjects.

(ii) A-movement is not necessarily driven by Case.

(iii) Theme object NPs in quirky subject constructions are assigned nominative Case in a functional projection above VP but below TP.

(iv) No third person restriction on nominative objects.

(v) Dative objects appear outside VP, but accusative objects appear inside VP at S-Structure (Spell-Out).

(vi) Nominative subjects and nominative objects are in complementary distribution. In other words, there is only one source of nominative per clause, and so the functional head with the nominative case feature must have the structural property that either a subject or an object is able to check it.

(vii) Infinitival clauses do allow nominative NPs: nominative Case is checked in an Agr projection above VP (see generalization (iii) above).

(viii) Nominative NPs control verb agreement. In other words, agreement in Kashmiri is a surface realization of the argument that has nominative.

6.3.3 A Restrictive Theory of Case and Checking

In this section, I propose an account of Case that is able to honor all of the linguistically significant generalizations about Kashmiri noted in (62) above. During the last decade, and mainly after the work in Icelandic Case syntax, it has become abundantly clear that bearing a Grammatical Function and being marked with a particular kind of morphological Case are two different things (Zaenen, Maling & Thráinsson 1985, Holmberg 1986, Cowper 1988, Maling & Zaenen 1990, Sigurðsson 1991, Freidin & Sprouse 1991, Marantz 1991b, Harbert & Toribio 1991, Schütze 1993, 1996, Tunstall 1994, Burzio 1995, Taraldsen 1995, Moorcraft 1996). The weight of evidence from languages like Kashmiri and Icelandic indicate that even though a lexical argument may have Case, it still needs to be in a certain structural configuration (Grammatical Function position) to be properly licensed. Given the overall modular architecture of the grammar, I suggest that Case and (D, etc.) Feature Checking belong to separate

modules: the Case module and the Checking module. Thus, when a particular derivation reaches LF, all NPs should be Case-marked (Visibility Condition), and all features checked (Full Interpretation).

Beginning with the Case module, I adopt the Case Filter of Chomsky (1986a):

(63) Every phonetically realized NP must be assigned Case.

Further, I propose that the verb assigns structural accusative Case to its direct complement: A detailed discussion of it is postponed till the next section. Turning next to the generalizations given in (62iii, vi, vii, viii), I suggest that in Kashmiri;

(64) AGR, when projected, assigns/checks nominative Case (feature) in the Specifier position of its projection (as shown below in (65)).

(65)

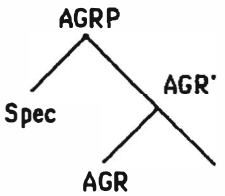

Following Koopman and Sportiche (1991:229), Case assignment by agreement is defined as follows: if some head H is a Case assigner by agreement, it may assign Case to an NP in its specifier position as a reflex of the general process of specifier-head agreement. I claim that in languages like Kashmiri where agreement is simply a reflex of nominative Case assignment, AGRP projection is responsible for assigning the nominative Case. The obvious virtue of this line of reasoning is that it explains object advancement (recall section 6.1) as a Case-theoretic movement in languages like Kashmiri (and possibly also Hindi, Icelandic, Japanese, and Inuit). Further, this approach is also able to dispense with the functional projections AgrSP (= subject agreement) and AgrOP (= object agreement) from the phrase structure of languages such as Kashmiri, in which only one argument NP, either subject or object, controls predicate agreement.[32]

Turning now to the checking theory, the crucial hypothesis in that

[32] For languages that have both subject and object agreement, see Georgopoulos (1991) for an account that does not require AgrSP and AgrOP.

module is:

(66) Feature-Checking:
A derivation will crash at LF if the D-feature of a DP is not checked.
(The D-feature of a DP is checked in the checking domain of a functional projection.)[33]

I assume, following Chomsky (1995), that in Kashmiri the D feature of T is strong, which has the consequence of moving the subject to the Spec-TP. This, in essence, satisfies the Extended Projection Principle, a requirement that every clause have a subject (Chomsky 1981). I state the principle in (67) below:

(67) Extended Projection Principle (EPP):
In Kashmiri, the D feature in T is strong (and, therefore, must be checked before Spell-Out).[34]

The EPP is a claim about the distribution of the subject in the syntactic structure of a clause. I claim that in Kashmiri nominative as well as nonnominative NPs move to the subject position (Spec-TP) for reasons other than Case: they move to satisfy the EPP.[35] Checking theory requires that a DP be in a Spec-Head configuration of some functional projection, at least by LF for D-feature checking requirement: the EPP is one manifestation of that requirement.

Turning to objects, we noticed that in Kashmiri objects are assigned one of the following Cases: nominative, dative, or accusative. Given (64), I claim that nominative objects move to Spec-AGR to get Case. With respect to dative objects, I suggest that most, not all, transitive predicates in Kashmiri subcategorizing for theme arguments are generally underspecified for the feature [specific].[36] However, if they

---

[33] Although the movement to fill the subject position (Spec-TP) is driven by the EPP, there is, as Burzio (1995:2) notes, "no reason to suppose that objects of transitive verbs also move (to Spec of AGRO), since there appears to be no object counterpart to the EPP." Although I agree with Burzio's assertion, I will stay with the Minimalist assumptions and assume that at LF objects are in Spec positions of functional projections for D-feature checking.

[34] This is, in fact, a stipulation, as in Chomsky (1995): Strong features must be checked before Spell-Out for a derivation to converge; D features are categorial features of DP. T, the head of the clause, is the locus of tense; thus a DP must raise before Spell-Out to the checking domain of T where it can check the strong D feature.

[35] In this way, I separate Case theory from checking theory (and account for quirky constructions).

[36] One of the exceptions to the "specific-underspecification" is the verb *laayun* 'to hit', which always subcategorizes for a [+specific] theme NP. This [+specific] theme NP is always morphologically marked with the dative Case.

are D(iscourse)-linked, in the sense of Pesetsky (1987), they are assigned a positive value for the feature [specific], and the verb either assigns dative Case to morphologically mark specificity, or they move to Spec-AGR to get morphological Case (nominative) and then move farther up in that projection to check the specificity feature, as discussed before in section 6.1.3.[37]

6.3.4 Accusative as "Last Resort"

The case of accusative Case is most interesting in Kashmiri. The standard wisdom for accusative Case is that it is a structural Case assigned by the verb to its direct complement. I will accept this proposal for Kashmiri but add that in Kashmiri, the verb assigns structural accusative only if it has to. I formalize this hypothesis below and explore its consequences next.

---

[37] Recently, Wunderlich (1997) has suggested that dative is a structural Case in German. The evidence in German comes from 'get' passive constructions where the dative theme (ia) appears as nominative subject of the passive (ib):

(ia) als ich ihm dankte/half
when I(N) him(D) thanked/helped
When I thanked/helped him.

(ib) Er kriegte gedankt/geholfen
he(N) got thanked/helped
He was thanked helped.

Wunderlich (1997:51) argues that although the requirement of the dative is a lexical property of these (see (ia) and ib)) verbs, this dative nevertheless must be considered to be a structural Case since the dative argument can appear as the subjects of the passive (ib). This argument is based on the observation that only lexical (inherent) Case is preserved during passive movement (cf. Maling & Zaenen 1990, *inter alios*).
In Kashmiri, however, 'dative-as-the-structural Case' argument cannot be maintained because the dative objects retain their Case when passivized to subject position, as shown below:

(iia) me vuch temis
I(E) saw she(D)
I saw her.

(iib) temis aav vuchnI
she(D) came see-pass
She was seen.

(iiia) tem dyut laRkas kalam
he(E) gave boy(D) pen
He gave a pen to the boy.

(iiib) laRkas aav kalam dinI
boy(D) came pen(N) give-pass
The boy was given a pen.

(68) The Accusative Hypothesis:
Accusative is the "Last Resort" structural Case (in Kashmiri), i.e., it is assigned by the verb to its complement (strict c-command) if the convergence of the derivation hinges on it (crashes otherwise).

The Accusative Hypothesis is thus a statement of the Economy condition under which the verb assigns accusative to its complement.[38] The "Last Resort" nature of accusative assignment is probably a Case-reflex of the "Enlightened Self-Interest" principle suggested by Lasnik (1995). In other words, if the object NP has nowhere to get Case, the verb assigns it structural (accusative) Case to prevent the Case Filter violation (64). Recall from section 6.1 that accusative objects appear only in those transitive clauses where the subject is nominative and, crucially, the object is nonspecific. Recall again from the discussion in section 6.2.1 that in dative subject constructions, nominative is the only possible structural Case on objects.

It has been generally assumed for related Indo-Aryan languages that in quirky (ergative and dative) constructions structural accusative Case is suppressed (Mahajan 1990, 1991a, 1994, 1995). A careful observation of the empirical facts suggests that the structural accusative, at least in Kashmiri, is indeed available but only in accordance with the Accusative Hypothesis. Consider the contrast in (69a-d). In (69a), the word order is canonical, and the direct complement of the verb is assigned nominative Case in the Spec-Head configuration of the AGRP projection; the nominative argument also controls verb agreement. The indirect object adjoins to AGRP for specificity checking.[39] In (69b), only the direct complement moves for Case checking. In both cases, none of the verbal complements appear with the structural accusative. Compare now (69a,b) with the dative-shifted constructions (69c,d) where the inherent dative to the goal argument is suppressed (unassigned). In the dative-shifted construction (69c), the (indirect)

[38] The assignment (discharge) of structural Case by the verb is, given the overall "Economy" approach, altruistic. The other (uncontroversially) structural Case, viz., Nominative, is assigned by AGR but at the same time the phi-features of AGR are also checked (=reciprocity) by the NP in its Spec via Spec-Head agreement. The intuitive content of the Last Resort approach is that an operation, like Case marking/checking, is permissible at S-Structure only to salvage a derivation from crashing. Besides, in many other languages, e.g., Icelandic (cf. Sigurðsson 1991), Hindi (cf. Mahajan 1990), the structural Case of the verb remains unassigned in, e.g., ECM contexts.

[39] (69a) is a possible response to a question like, What did the boy teach the girl? (69b) is a possible response to the question, Who did the boy teach Math?

object NP *kuur* 'girl' is Caseless and must, therefore, move to Spec-AGRP to get nominative and control object agreement, whereas the second NP is assigned structural accusative Case, as the "Last Resort", by the verb. In other words, if there is a direct object needing Case, then the verb will assign structural Case to it if that direct object cannot get Case from elsewhere. Now, consider (69d) where the direct object moves first to Spec-AGRP to get Case. In this situation, then, the indirect object NP is unable to get structural Case — either from the AGR, which is occupied by the direct object NP or from the verb, which assigns structural accusative as a "Last Resort" under strict c-command (to its direct complement), by hypothesis — and as a result the derivation crashes because of a violation of the Case Filter.

(69a) laRkan parnoov koryi hisaab
boy(E) taught girl(D) math(N)

The boy taught math to the girl.

(69b) laRkan parnoov hisaab koryi
boy (E) taught math(N) girl(D)

The boy taught math to the girl.

(69c) laRkan parnaav kuur hisaab
boy(E) taught girl(N) math(A)

The boy taught the girl Math.

(69d) *laRkan parnoov hisaab kuur
taught math(N) girl(?) boy(E)

The boy taught the girl Math.

It follows from the Accusative Hypothesis that Passive in Kashmiri, (70) below, does not involve suppression of structural accusative, but rather, the object moves elsewhere (Spec-AGRP) to get Case and to Spec-TP to satisfy the EPP.

(70) $[_{TP}$ kitaab$_i$ $[_{T'}$ cha $[_{AGRP}$ t_i $[_{VP}$ t_i parnI
book is read-Pass

yivaan]]]]
come-prt

The book is being read (by someone).

More robust evidence for the Accusative Hypothesis comes from the passivization possibilities in double object constructions. In Kashmiri, both indirect and direct objects can passivize, as shown below in (71a-d). In the active voice, (71a), the subject is in the nominative Case, the indirect object is in the (inherent) dative Case, and the direct object is in the accusative Case. In (71b), when the indirect object passivizes and moves to the subject position Spec-TP, the Spec-AGRP position is available as a structural Case position. The direct object which is Caseless, by hypothesis (63), moves to Spec-AGRP to get nominative Case, triggering object agreement. When the direct object is passivized, as in (71c), it moves to Spec-TP, but it must first move to Spec-AGRP to get structural Case, which it does, triggering verb agreement. The ungrammaticality of (71d) results when the Caseless direct object moves directly to Spec-TP skipping a structural Case position Spec-AGRP, which results in the violation of Case Filter.

(71a)

ba	chas	laRk-as	kamiiz	divaan
I(N)	prs-f,sg	boy(D)	shirt(A,f,sg)	give-NPerf

I give a shirt to the boy.

(71b)

laRk-as	cha	kamiiz	dinI
boy(D)	prs-f,sg	shirt(N,f,sg)	give-Pass

yivaan
come-prt

The boy is being given a shirt.

(71c)

kamiiz	cha	laRk-as	dinI
shirt(N,f,sg)	prs-f,sg	boy(D)	give-Pass

yivaan
come-prt

The shirt is being given to the boy.

(71d)

*kamiiz	chu	laRkas	dinI	yivaan
shirt(f,sg)	prs-m,sg	boy(D)	give-Pass	come-prt

The shirt is being given to the boy.

What I have been suggesting so far is that subject and object compete for Spec-AGRP position, if generated. When both the VP-internal

subject and object are Caseless, the subject moves to Spec-AGRP (*à la* Shortest Move, Minimal Link Condition) to get structural nominative, and the verb is then forced, as it were, to assign structural accusative to its direct complement. In quirky constructions, however, the subject has Case VP-internally, and therefore the object in such construction always has the option of getting structural Case from AGR, if needed. This competition, then, explains why nominative is the only possible structural Case in dative subject constructions in Kashmiri (Bhatt 1993a, 1994) and in quirky constructions in Hindi (Mahajan 1990, 1995) and Icelandic (Jónsson 1993).

The competition between subject and object for Case from AGR, qua the Accusative Hypothesis (68), makes an interesting empirical prediction for monovalent unaccusative constructions: they should not freely cooccur with expletive subjects (cf. Bittner & Hale 1996). Expletive subjects with unaccusatives are forbidden because expletives, phonetically overt but semantically vacuous, need Case and the only structural position for them to get Case in is Spec-AGRP. If so, then the verb will be forced to assign structural accusative to its direct argument, by hypothesis. There are indeed some languages, like Eastern Pomo, Polish, and Inuit (cf. Bittner & Hale 1996), which allow unaccusative verbs to assign structural accusative Case with an expletive subject. In the following Eastern Pomo example, taken from Bittner and Hale (1994), the object is assigned structural accusative Case by the verb: the subject is an expletive subject *pro*.

(72)	mí·p-al	xá·	ba·kúma
	him(A)	in.the.water	fell

He fell in the water (accidentally).

The Accusative Hypothesis thus provides a straightforward explanation of (72): when Spec-AGRP is taken by the expletive for Case-theoretic reason, then the verb must assign structural accusative to the theme object NP, or else the derivation will crash as a violation of the Case Filter.

Finally, I claim that the Accusative Hypothesis is a stronger, but slightly different, version of Burzio's generalization. The intuitive content of Burzio's Generalization was that the absence of the subject (-θ-role) makes the movement of the object possible, and the suppression of the accusative Case guarantees "one Case/one θ-role" (Visibility) for an A-chain. This -θ-role/-object Case correlation, however, does not hold in Kashmiri and in many other languages (cf. Zaenen, Maling & Thráinsson 1985, Zaenen & Maling 1990, Marantz 1991b, Sigurðsson 1991, Mahajan 1995, Noonan 1995, Yoon 1996, Bittner & Hale 1996,

Lyle 1996) where either verbal Case suppression occurs in the presence of an external (thematic) argument or Case is not suppressed in the absence of an external thematic argument.[40] Even if Burzio's Generalization is reformulated as in Belletti & Rizzi (1988), i.e., V is a structural Case assigner iff it has an external argument, we still find emperical exceptions in Kashmiri (noted above), Hindi (Mahajan 1990), Italian and Portuguese (Kempchinsky 1988) where the verb assigns "inherent", not structural, Case to its internal argument and theta marks an external argument. The empirical results thus force us to abandon Burzio's Generalization and instead adopt the Accusative Hypothesis, which is both conceptually (Economy) and empirically well-motivated.[41]

6.4 ACCOUNTING FOR CASE ARRAYS

This section demonstrates how the account of Case developed in section 6.3 above motivates the movement of subjects and nominative objects in Kashmiri to Specs of TP and AGRP, respectively. The different Case arrays and the associated heads assigning Case are given in the table below.

Case / Terms	Structural		Inherent/
	AGR	Verb/Asp(+perf)	Lexical
Subject	Nom	Erg	Dat
D. Object	Nom	Acc	Dat
I. Object			Dat

Table 1. Case assigners and Case arrays.

[40] What is in fact noted as a generalization is the correlation between the inability of a verb to assign structural Case and its subject receiving a lexical/marked structural Case (Mahajan 1995, Bittner & Hale 1996, Nash 1996), although in Kashmiri that generalization does not hold, especially with the ergative subject constructions.

[41] The original conceptualization of BG is not empirically supported, as Burzio (1995) himself acknowledges. In fact, in Burzio (1995) he instead argues that when movement connects two different grammatical relations, with their corresponding Cases, then the Case of one argument is suppressed to avoid "Visibility" violations. I will not discuss the details of his (1995) work but only note that his proposal, couched in an optimality-theoretic framework (Prince & Smolensky (1993), abandons the old and popular assumption that A-movement is to get Case and proposes several alternatives to derive the standard movement cases.

Before I present a discussion of Case arrays, a brief review of some of the assumptions about the syntactic projection of argument structure will help clarify the discussion in the subsequent subsections. Following Speas (1990a), I suggest that the thematic hierarchy is the principle by which the arguments are ordered in the theta grid. The arguments are ordered in a theta grid according to the hierarchy (73) given below (implicit in works of Belletti and Rizzi 1988, Grimshaw 1990, Carrier-Duncan 1985, Speas 1990a).[42]

(73) AGENT < EXPERIENCER/GOAL < THEME < SOURCE/LOCATION< MANNER/TIME

Further, I also assume that a combination of Baker's (1988:46) Uniformity of Theta Assignment Hypothesis (UTAH) (74) and Larson's (1988:382) Mapping Principle (75) regulates the mapping of arguments in theta grid onto syntax.

(74) UTAH: Identical thematic relationships between items are represented by identical structural relationships between those items at the level of D-Structure.

(75) Mapping Principle: If a verb determines θ-roles "1, 2, ..., n," then the lowest role on the Theta Hierarchy is assigned to the lowest argument in constituent structure, the next lowest role to the next lowest argument, and so on.

For purposes of simplicity as well as comprehensibility, I use a representation of argument structure that approximates the work of Grimshaw (1990). In Grimshaw's theory, theta role labels are used to identify arguments, and the external argument is the one that is surrounded by only one set of parenthesis. External arguments, it turns out, are always Agents; thematically and aspectually most prominent. This external argument is projected as the Specifier of the "light" verb Phrase (vP) projection (cf. Chomsky 1995). This approach, the VP-internal subject hypothesis, is consistent with a number of recent works which have argued that subjects must be generated within VP (Zagona 1982, Kitagawa 1986, Fukui & Speas 1986, Kuroda 1988, Koopman & Sportiche 1991, among others) and that all theta roles of the verb are assigned within the verbal projection. The internal arguments, indirect

[42] Predicate Argument Structure (PAS), as we understand, states how many arguments the predicator must take in syntax and organizes them for appropriate mapping into syntax (Speas 1990a:12). Here I am not concerned with the precise manner in which the association of particular arguments in the theta grid with particular syntactic positions is accomplished.

and direct objects, are projected in the specifier and the complement position, respectively, of the lower Verb Phrase (VP).

With this background let us turn to the specific instantiations of Case of grammatical functions in Kashmiri. A good starting point are the nonperfective clauses; these clauses show the familiar nominative-accusative pattern. This is followed by an extended discussion of dative subject Case in DSCs. It will be argued that the assignment of dative Case is governed by the lexical (=semantic) properties of the predicate. Next is a discussion of perfective clauses; in these clauses, the subject appears with ergative Case whereas the object appears with the nominative Case. Finally, the section ends with a discussion on how the assignment of nominative Case on objects is accomplished in some selected languages which have nonnominative Case on subjects.

6.4.1 Nominative-Accusative

Consider a typical transitive clause like (76a). The S-Structure of (76a) is given in (76b) below. Note that I am assuming with Travis (1991) and Collins and Thráinsson (1996) that there is an additional functional projection, AspP, between the VP-internal subject and the other verbal arguments.[43] Further, I also assume that the projection of the Specifiers is optional (cf. Bobaljik & Jonas 1996); they project if something moves there or if they are targets of movement. At the S-Structure, then, the subject of these transitive clauses, being Caseless, moves to Spec of AGRP to get (check nominative) Case and satisfy the Case Filter (64). It then moves to Spec of TP to satisfy the EPP (67). The Theme object NP, on the other hand, is assigned structural (accusative) Case under c-command by the verb (cf. The Accusative Hypothesis) and, therefore, at S-Structure it stays *in situ*. At LF, the Theme object NP moves to the Spec of AspP to satisfy Checking requirements (66); this (only the relevant structure) is shown in (76c).

(76a)	laRk	ch-u	tsoT	khyv-aan
	boy(N)	aux(m,sg)	bread(A,f,sg)	eat-NPerf

The boy eats bread.

[43]For both empirical and theoretical motivation for the postulation of VP-internal functional projections, see particularly Collins and Thrainsson (1996).

(76b) S-Structure

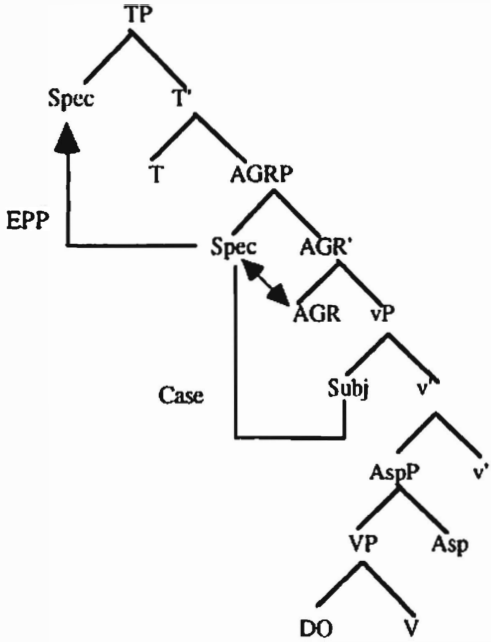

(76c) LF

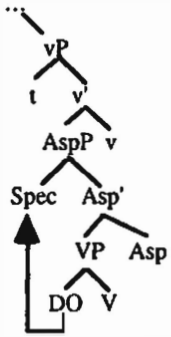

Turning next to ditransitives, consider (77a); the S-Structure is given in (77b). I follow Larson's (1988) VP-shell analysis for double object constructions with the exception, however, that the Goal is projected

higher than the Theme argument, consistent with the thematic hierarchy mentioned above (73):[44] the indirect object is base-generated in the Spec of the lower VP and the direct object is generated in the complement position of the lower verb.

(77a)

laRk	ch-u	shur-is	tsoT
boy(N)	aux(m,sg)	child(D)	bread(f,sg)

div-aan
give-NPerf

The boy gives the bread to the child.

(77b)

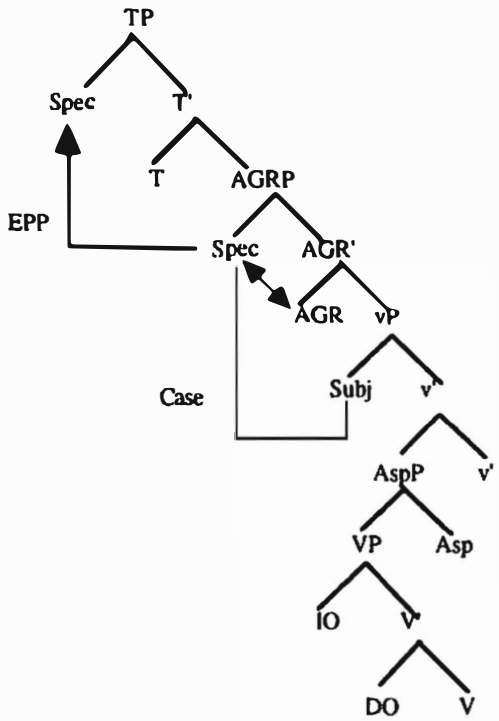

[44] Collins and Thrainsson (1996) also provide evidence for projecting Goal above Theme in a Larsonian-type VP-shell account of the double object constructions in Icelandic.

At S-Structure, the subject moves, as shown above, to Spec-AGRP to get Case, and then move to Spec-TP to satisfy EPP. The objects remain *in-situ* at S-Structure, as shown in (77b) earlier: they move at LF to the Specs (outer and inner) of the AspPs for D-feature-checking.[45]

6.4.2 Dative-Nominative

Turning next to dative subject constructions, I argue that the theory of Case and Checking proposed in section 6.3 provides an account of dative NP movement to the canonical subject position (Spec-TP). A straightforward account of DSCs is to assume that the subject of a DSC is lexically assigned dative Case by the verb. This intuition is followed in various proposals of DSCs (or quirky constructions) in other languages and within alternative frameworks (see Zaenen, Maling & Thráinsson 1985, Yip, Maling & Jackendoff 1987, Davison 1988, Cowper 1988, Sigurðson 1989, Verma & Mohanan 1990, Marantz 1991b, Harbert & Toribio 1991). All along, however, I have been assuming that dative Case is an inherent Case; i.e., it is lexically assigned to the Goal argument. This assumption is investigated in the next section against data from Kashmiri.

6.4.2.1 The Dative (Subject) Case

The assignment of dative Case in Kashmiri is always tied to some semantic criteria: it is associated with the Goal argument, the indirect object, or it optionally appears with the Theme argument, the direct object, iff the direct object is construed as specific. With respect to DSCs, it has been shown cross-linguistically that the distribution of dative Case is governed by semantic properties such as possession, nonvolitionality, stativity, obligation, subjectivity, and goal (cf. Y. Kachru 1970, 1990, Masica 1976, Sridhar 1976, McAlpin 1976, and Verma & Mohanan 1990). In the following subsections I will explore the range of psych predicates in order to approach a semantic generalization governing the dative Case in Kashmiri DSCs.

One crucial property of these subjects is that they **cannot** be interpreted as volitional agents as the ungrammaticality of (78) suggests: dative subjects cannot appear with volitional adverbs.

---

[45] I am assuming here with, especially, Koizumi (1994) and Chomsky (1995) that functional projections can have two specifier positions. When the indirect object is specific, which is usually the case, then it also moves in the overt syntax (S-Structure) to a position adjoined to Spec-AGRP. If the indirect object is nonspecific, then it moves only at LF to the outer Spec of the AspP.

(78) *laRk-as ch-a swa kuur khar-aan
boy(D) prs-f,sg that(N) girl(N) hate-NPerf

zaanith-maanith
deliberately

The boy deliberately dislikes that girl.

Some of the predicates that govern the distribution of dative subjects are discussed next to establish some semantic generalizations associated with dative Case assignment.

6.4.2.1.1 Verbs of Perception

First, let us consider constructions with verbs that describe imposition of some element on the senses of the perceiver. In (79a) below, the dative NP *tem-is* 'he' has something imposed on his visual field and is thus forced into sighting something. In (79b) the dative NP *laRkas* 'boy' burnt his fingers without the intention to do so because he had inadvertently touched something hot. The ungrammaticality of (79c) is due to the incompatibility of the adverb *zaanith maanith* 'deliberately, purposely' with the dative subject which shows no control over the action. In (79d) the NP *laRkas* feels the sensation of cold, again an event, over which the subject has no control.

(79a) tem-is aa-yi swa booz-na
he(D) come-Perf-(f,sg) she(N) see-Inf

He was able to see her [Lit.: To him, she became visible]

(79b) laRk-as log algaab ongjyan tot
boy(D) felt(m,sg) inadvertently fingers hot(m,sg)

The boy inadvertently burnt (his) fingers.

(79c) *laRk-as log zaanith maanith
boy(D) felt(m,sg) deliberately

ongjyan tot
fingers hot(m,sg)

The boy burnt (his) fingers deliberately.

(79d) laRk-as laj tIIr
boy(D) felt(f,sg) cold(N,f)

The boy felt cold. [Lit.: To the boy, cold was felt]

The data above show that in perception verbs, the dative NP is a Goal: the action is transferred onto its field of experience and it seems to belong to the receiving end of the action, i.e., with no control over the event. Contrast this with nondative NP subjects. In these cases there is an obvious volitional control that the subject exercises over the event as seen in (79a') below which contrasts with (79a) above.

(79a') su hyok tem-is vuch-ith
he(N) able(m,sg) she(D) see-CP

He was (after trying successfully) able to see her.

6.4.2.1.2 Verbs Expressing Possession

In Kashmiri, all forms of possession, inalienable (80a, b) or alienable (80c, d), permanent (80e), acquired (80f) or transient (80g), are formally expressed in terms of dative subjects, as shown in data below.

(80a) kaashar-an aas dohay ziiTh
Kashmiri(D) aux(f,sg) everyday long

nas
nose(N,f,sg)

The Kashmiris always have had a long nose.

(80b) tas kaashir koor-yi ch-u seThaa
that Kashmiri girl(D) aux(m) much

sondar mas
pretty hair(m)

That Kashmiri girl has very pretty hair.

(80c) tem-is ch-u seThaa zamiin
he(D) aux(m,sg) much land(N,m,sg)

He has a lot of land.

(80d)

tem-is	ch-a	seThaa	kaam
he(D)	aux(f,sg)	much	work(N,f)

He has a lot of work.

(80e)

tem-is	gasyi	yenaam
he(D)	need	award

He wants the award.

(80f)

tem-is	ch-u-na	paaNs
he(D)	aux(m)-Neg	money(N,m)

He does not have money.

(80g)

tem-is	ch-u	taph
he(D)	aux(m,sg)	fever(N,m,sg)

He has fever.

Clearly, the dative NP in all of the cases above is the possessor.

6.4.2.1.3 Verbs Describing Physical Event

The data given below illustrate constructions where a physical event beyond the control of the experiencer takes place. (81a, b) express transient physical states while (81c, d) express permanent physical states. In all cases the actions occur without the dative experiencer intending to do so, as suggested by the ungrammaticality of (81a', b', and c') and the adjunct clause in (81d).

(81a)

tim-an	draav	zuu
they(D)	left(3,m,sg)	life(m,sg)

They got scared.

(81a')

*tim-an	draav	jaanboojke	zuu
they(D)	left(3,m,sg)	purposely	life(m,sg)

They got purposely/intentionally scared.

(81b) tem-is korun sakh kal-dood
he(D) did lot head-ache

His head began to hurt badly.

(81b') *tem-is korun jaanboojke sakh kal-dood
he(D) did purposely lot head-ache

He intentionally bagan to get a lot of headache.

(81c) tath gar-as log naar
that(D) house(D,m,sg) got(m,sg) fire(N,m,sg)

That house caught fire.

(81c') *tath gar-as log naar
that(D) house(D) got(m,sg) fire(N)

[yithpaaThyi tem dyut hukum]
like he(E) gave order

That house caught fire [just the way he ordered].

(81d) shur-is aa-yii dIIDyi
child(D) came(f,sg) beard(N,f,sg)

[haalaaNki su oos-na yetshaan]
even though he aux-Neg want-NPerf

The child got beard [even though he did not want it].

The distribution of dative NPs in the examples above suggests that in physical action verbs, experiencers are in fact Goals, i.e., the entity towards which the action moves (in abstract space).

6.4.2.1.4 Verbs of Psychological State

The experiencer argument is dative when the experiencer is in a state (82a) or undergoes (82b) a psychological state that is not under his/her control. Contrast (82a, b) with (82c) where the subject NP is, in fact, in control of the psychological state; where he makes a conscious choice in expressing "liking," the experiencer NP is marked nominative.

(82a) ramesh-as ch-a shiilaa seTha pasand
Ramesh(D) aux(f,sg) Sheila(N) much like

Ramesh likes Sheila very much.

(82b) ramesh-as aa-yii shiilaa seTha pasand
Ramesh(D) came(f,sg) Sheila(N) much like

Ramesh likes Sheila very much.

(82c) ramesh ch-u shiilaayi (jaanboojke)
Ramesh(N) aux(m,sg) Sheila(D) (deliberately)

seTha pasand kar-aan
much like do-NPerf

Ramesh (deliberately) likes Sheila very much.

A nominative experiencer indicates that the experiencer could have (exercised) some control over his/her action; i.e., (82c) can have the following interpretation: "As opposed to Mary, Ramesh prefers Sheila in terms of liking her". A similar contrast in terms of volitionality vs. nonvolitionality can be seen in the pair of sentences (83). With a dative experiencer, the subject is not interpreted as having any control over his emotions, whereas in (83b), it is interpreted that the subject "himself chose/elected to become happy, among other given sets of emotions."

(83a) tem-is ga-yi khoshii
he(D) went(f,sg) happiness(N,f)

He became happy.

(83b) su gav (jaan booj ke) khosh
he(N) went(m,sg) (deliberately) happy

He became (deliberately) happy

Certain other mental dispositions/transient psychological states (84) are always exhibited by experiencer datives reflecting no volitional control.

(84) tem-is khot jahal [tem yel
he(D) rose(m,sg) anger(N,m,sg) he(E) when

yi shesh buuz]
this news heard

He became angry when he heard this news.

6.4.2.1.5 The Semantic Generalization

The data above (79-84) indicate that the DSC in Kashmiri is not employed with a single semantic class of predicates but rather with a group of semantic classes. Although it seems a rather daunting task to characterize, in terms of a single semantic generalization, the semantic domains which have been observed to be associated with dative subjects in Kashmiri, it is arguably the semantic category Goal that best approximates the meanings of the argument that receives dative Case in DSCs. The semantic role Goal can be conceptualized as the target of a movement in abstract space (cf. Mohanan and Mohanan 1990).[46] This semantic role is assigned typically by all and only those predicates which do not assign the feature [control]. This semantic characterization immediately explains the contrast between (85) and (86). In (85a), the dative NP does not indicate any control over the activity denoted by the verb, while the nominative NP in the corresponding (b) sentence shows control over the activity denoted by the predicate, even though both dative NPs appear to be the eventual recipients (in absolute semantic terms).

(85a) tem-is meel-yi akh kampyuTer
he(D) get-Fut(m,sg) a computer(N,m,sg)

He will get a computer.

(85b) su hye-yi akh kampyuTer
he(N) buy-Fut(m,sg) a computer(A,m,sg)

He will buy a computer.

The volitional control over the event denoted by the predicate can be demonstrated by using an appropriate adverbial phrase such as *wuchith*

[46] I will, in absence of a better alternative, characterize possession (see(79)) as goal, construed more precisely as locative goals. Experiencers can also be construed as a subtype of goal because they represent the target of the predicate's effect.

karith 'after looking hard' as shown in (86). The unacceptability of (86a) follows from the fact that the adverbial is semantically incompatible with the role of dative argument. Such a situation does not obtain in (86b) where the predicate is [+control] and is thus compatible with the semantics of the adverbial.

(86a) *tem-is meel-yi wuch-ith kar-ith akh
he(D) get-Fut(m,sg) see-CP do-CP a

kampyuTer
computer(N,m,sg)

He will get a computer after he looks hard (for it).

(86b) su hye-yi wuch-ith kar-ith
he(N) buy-Fut(m,sg) see-CP do-CP

akh kampyuTer
a computer(A,m,sg)

He will buy a computer after he looks hard (for it).

A final piece of evidence for the correctness of our semantic analysis of dative subjects comes from the grammaticality contrast in (87). The grammaticality of (87a) is perhaps obvious since nobody has any control over the event indicated. The ungrammaticality of (87b) results from the incompatibility of the Goal NP for an act which requires a high degree of control and, of course, volitional participation. The contrast that obtains in (87b, c) confirms that our account of the semantic analysis of dative subjects is on the right track.

(87a) laRk-as aa-yii moot
boy(D) came(f,sg) death(f)

The boy died [Lit. Death came to the boy].

(87b) *laRk-as aa-yii khodkaashii
boy(D) came(f,sg) suicide(f)

The boy came/underwent suicide.

(87c) laRk ch-u khodkaashii kar-aan
boy(N) aux(m,sg) suicide(f) do-NPerf

The boy is committing suicide.

Finally, I argue that Experiencers are, in fact, a type of Goal. Conflating Experiencer with Goal leads to the desirable conclusion that speakers of different languages (e.g., Kashmiri, Malayalam (cf. Mohanan & Mohanan 1990) Italian (cf. Belletti & Rizzi 1988) and English) do not conceptualize experiences differently; they just have a different Case-marking system (cf. Speas 1990b). In (88) and (89) below, I provide examples of Kashmiri DSCs where the Experiencer subject can clearly be conceptualized as a type of Goal and where the movement toward and away from the Experiencer argument is indicated.

(88) temis laj goD tAAr, magar pat tsajas yelyi
he(D) felt first cold but later went away when

su pakun hyotun
he(N) walk-Inf start-Inf

He got cold at first, but later it (the chill) went away when he started walking.

(89) temis khot seTha taph, magar pat vothus
he(D) climb-up a lot fever but later climb-down

akayi pilyi siith (soorui taph)
one pill with (all fever)

His fever went up, but it came down with only one pill.

Further, Experiencers, like Goals (cf. 86a, b), do not exert any control over the event, as the grammaticality contrast in (90) and (91) show. The unacceptability of (90) is mainly due to the incompatibility of the psych predicate, which assigns [-control] to its subject, with the adverb that requires volitional (conscious choice) subjects. The situation is repaired when a nonpsych predicate is chosen which requires volitional subjects, as in (91).

(90) *temis khot jaanboojke jahal
he(D) climb-up purposely anger

He felt purposely angry.

(91) tem kor jaanboojke jahal
he(E) did purposely anger

He got purposely angry (perhaps, to make a point).

Given the data in (88 - 91) above, it is possible to claim that Experiencers are indeed a subtype of Goal. Malayalam is another language where a similar claim has been made that Experiencers are a type of Goal (Mohanan & Mohanan 1990). Further, there is evidence that even in English (cf. translation of (88), given below as (92)) an Experiencer subject can be conceptualized as a Goal (Speas 1990b).

(92) He got cold at first, but later it (the chill) went away when he started walking.

6.4.2.2 Summary

In the preceding section, we showed that the DSCs in Kashmiri are not employed with a single semantic class of predicates, but rather with a group of semantic classes. However, I argued that the semantic category Goal best approximates the meaning of the argument that receives dative Case in DSCs. Further, I hypothesized that the Goal semantic role is assigned typically by all and only those predicates which do not assign the feature [control]. We provided evidence from Kashmiri to support this hypothesis.

Having established that the dative nominal in DSCs is the subject and that the notion Goal is the dative-inducing semantic construct and that Experiencer is in fact a subtype of Goal, we turn now to show how our account of Case, developed in section 6.3, motivates the movement of the lexically Case-assigned NP, known popularly in the literature as psych movement, to the canonical subject position.

6.4.2.3 "Psych" Movement and Nominative Objects

The theory of Case and Checking proposed in section 6.3.3 above provides a straightforward account of DSCs like (93). In (93a), the subject DP appears with a dative Case, whereas the object DP appears with the nominative Case and controls verb agreement. The so-called "psych" movement — movement of the dative DP to Spec-TP — is forced by the EPP, not Case. The object DP moves to Spec-AGRP to get nominative Case. I discuss the details of the movement next.

(93a) tem-is khar swa kuur
he(D) disliked(f,sg) that girl(N,f,sg)

He disliked that girl.

(93b) kharun: "to dislike" PAS: ((x (y)))
Exp Theme

Following Grimshaw's framework, I suggest (93b) as the predicate argument structure of a psych verb like *kharun* 'dislike' where none of the arguments (Experiencer, Theme) qualifies for external argumenthood, one that is both thematically and aspectually most prominent. Hence, the Goal/Experiencer DP, though thematically the most prominent argument, is still an internal argument. This argument is assigned dative Case lexically/inherently by the verb. At S-Structure, as shown below in (94), the Theme object is Caseless in its D-Structure position (cf. The Accusative Hypothesis) and must, therefore, move to get Case for the derivation to converge. In the overt syntax, then, the object first moves to Spec-AGRP to get (nominative) Case and to check its D-feature. It follows, then, that the object DP is forbidden to move any farther, by economy considerations. The object movement to Spec-AGRP is not a violation of Shortest Move (Chomsky 1993) since the verb movement to AGR renders both Spec-VP and Spec-AGRP equidistant from the complement position of the verb. The lexically-assigned dative argument raises directly from Spec-VP to Spec-TP to satisfy the EPP (check the strong D-feature in T). Again, this movement does not constitute a violation of Shortest Movement either because the AGR-V movement to T renders the position occupied by the object, Spec-AGRP, equidistant from the subject, Spec-TP. In other words, the adjunction of AGR to T permits the subject to skip Spec-AGRP.

(94) S-Structure (and LF) of DSC

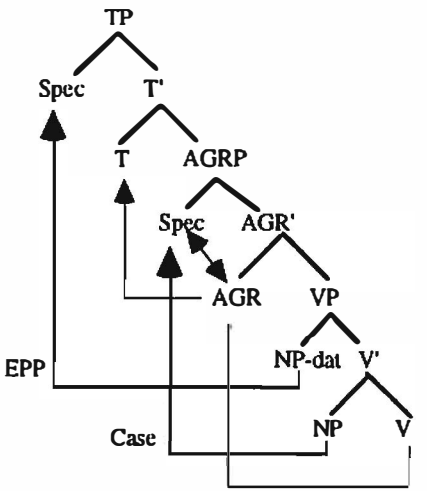

6.4.3 Ergative-Nominative[47]

In transitive perfective clauses, the surface subject appears with ergative Case whereas the object appears in nominative Case, as shown in (95).[48,49]

(95a) koory-av khyav zamutdod
girls(E) ate-Perf(m,sg) yogurt(N,m,sg)

The girls ate yogurt.

(95b) laRk-av kheyi akh tsoT
boys(E) ate-Perf(f,sg) one bread(N,f,sg)

The boys ate a bread.

The ergative subject presents an interesting dilemma. On the one hand, there is a standard assumption that perfect predicates are non-structural Case assigners and that ergative Case is lexically assigned to an internal argument. For Hindi, an Indo-Aryan language like Kashmiri, Khan (1989) and Mahajan (1990), among others, have argued that ergative Case marking is conditioned by the aspect perfect. In Grimshaw's (1990) framework of argument structure, a straightforward explanation of the ergative subject could be that although the ergative NP is thematically the most prominent argument, it is not the most prominent in the aspectual dimension. Its realization, therefore, is not specified by the aspectual analysis; rather, it is lexically specified by the ergative Case.

There is, on the other hand, evidence to claim that ergative subjects are Agents, and further, as argued earlier, they behave like agentive nominative subjects. Agents in Grimshaw's framework are external arguments, thematically as well as aspectually the most prominent arguments. That an ergative subject is indeed an Agent is shown by its compatibility with agentive adverbs as in (96a). Compare this with nominative subjects, (96b). Dative subjects which are not Agents (recall evidence from previous section) are incompatible with agentive

---

[47] Since absolutive NPs are phonologically and historically identical to nominative NPs in split ergative languages, I will be referring to them formally as nominative NPs.

[48] We need not concern ourselves here with dative direct objects, since, as noted earlier, the dative Case is lexically assigned to direct objects under specificity conditions.

[49] Besides, there are certain intransitive perfect predicates that regularly take ergative subjects, e.g. verbs such as *asun* "to laugh", *vadun* "to cry", etc., which do not have "purposive" meaning as one finds in Hindi (T. Mohanan 1990).

adverbs, hence the ungrammaticality of (96c).

(96a) laRk-an kar tsuur zaanith-maanith
boy(E) did-Perf theft(N,f,sg) deliberately

The boy stole (something) deliberately (to prove a point).

(96b) laRk ch-u tsuur kar-aan
boy(N) prs-m,sg theft(f,sg) do-NPerf

zaanith-maanith
deliberately

The boy steals deliberately (to may be get attention).

(96c) *laRk-as ch-a swa kuur khar-aan
boy(D) prs-f,sg that(N) girl(N) hate-NPerf

zaanith-maanith
deliberately

The boy deliberately dislikes that girl.

The data presented above can be explained by hypothesizing that ergative subject constructions have the same D-Structure as the nominative subject constructions; i.e., the ergative subject is generated in Spec-vP. Following Grimshaw (1990), I suggest that ergative subjects are external arguments, thematically and aspectually most prominent, with the Agent theta role. The suggestion that ergative subjects are Agents is corroborated by the compatibility of agentive adverbs with ergative and nominative subjects (96a,b) and their inability to occur with dative subjects (96c).

By assuming that the structure for ergative subject constructions is the same as nominative, a straightforward account of passivization, causativization, and nominalization in Kashmiri becomes available (recall section 6.2.2, data (40-49)). Following Grimshaw (1990), I propose that the Passive morpheme specifies in its argument structure the "suppression" of the external argument which, referred to as a(rgument)-adjuncts (licensed as arguments but not theta marked), are realized as oblique *by*-phrases. It follows, then, that the ergative nominal by virtue of being an external argument, by hypothesis, can be morphologically suppressed yielding passive constructions, as shown earlier in (44). The failure of Passive in dative subject constructions

(44) then follows from the fact that psych verbs do not have external arguments that can undergo morphologically specified suppression.[50]

With respect to nominalization possibilities, the reason ergative, and crucially not dative, subject constructions can have nominalized counterparts is that nominalized clauses are productively formed only by the suppression of an external argument (cf. Grimshaw 1990: 107-151). This explains the failure of dative Case-marked subjects to nominalize (49b) since the psych predicates do not have argument structures with external arguments. As in Passive, only verbs with external arguments (which can be lexically suppressed) will undergo nominalization. The perfect predicates have an external argument, whence the nominalization of these predicates becomes possible.

With respect to causativization, we noticed earlier that the causee in such constructions, expressed as an oblique adjunct, is an agent unaffected by the causing agent. I propose that the causative *-inaav* involves the passivization of the embedded verb (cf. Baker 1988): The external argument (causee) is supressed and is realized as an optional oblique phrase. Ergative constructions can, therefore, causativize because the base verb has an external argument, while the transitive dative subject constructions fail to causativize (49b) because they lack an external argument.

The arguments presented so far establish that the ergative subject is an external argument. But what about its Case? Is it not quirky?

Speculating on the origin of split ergativity in Indo-Aryan, Benveniste (1966 [1971], 1974) and Pireiko (1968) observed the correlation between the passive meaning of the perfect participle of the transitive verb and the absence of the verb *have*. Others, like Anderson (1977, 1988) and Garret (1989, 1990) have argued that (aspect) split ergativity originates when a passive verb is reanalyzed as active and transitive. The linguistic change, the reanalysis, is shown below.

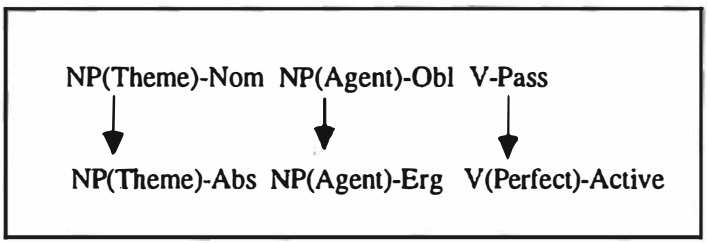

[50] Dative subjects are thematically, but not aspectually, most prominent and thus fail to qualify as "external argument".

This historical insight has been recently incorporated by Mahajan (1995) to motivate the mechanism of ergative Case assignment in Hindi.[51] The Kashmiri data below in (97) and (98) is comparable to the Hindi examples Mahajan uses to build his arguments. Mahajan argues that the argument NPs in the Hindi counterparts of (97) and (98) share a range of syntactic properties: (i) the *by*-phrase and the ergative phrase are the subject argument in their respective clauses; (ii) the other (nominative) phrase is the object argument; (iii) the perfect participles are not Case assigners;[52] (iv) the subject is lexically assigned (a) instrumental Case by the perfect predicate in association with the auxiliary (*go*), and (b) ergative Case by the perfect predicate in the absence of the auxiliary; and (v) the objects are assigned Case in the Spec-Head configuration of AgrOP.

(97) maasTar-as athyi$_j$ aayi asyi$_i$
teacher(I) by come-perf(m,pl) we(N,m,pl)

panyi$_{i*j}$ galti pyaTh maamI
self's mistake on beat-pass

We were beaten by the tacher for our mistake.

(98) maasTar-an$_j$ maaryI asyi$_i$ panyi$_{i/j}$
they(E) beat-perf(m,pl) we(N,m,pl) self's

galti pyaTh
mistake on

The teacher beat us on his/our mistake.

However, the theoretical assumptions and mechanisms in Mahajan's

[51] Mahajan (1994) assumes that ergative subjects are generated as oblique subjects, i.e., subjects appear with an unincorporated P (adposition). Although I agree with Mahajan that the morphological form, ergative, is tied to the lexical properties of the perfective morphology, I am, however, concerned with some aspects of his analysis deriving ergativity, though, he does admit that his account does not readily extend to Kashmiri. But there is yet another problem, which has to do with his assumption that ergative is assigned (as a constructional Case) by non-Case assigning predicates. As I have demonstrated above, perfect predicates in Kashmiri can assign morphological accusative Case. In fact, if the Accusative Hypothesis can be maintained, it follows that accusative Case is available, but not assigned, due to its Last Resort nature. Certainly more cross-linguistic research is needed to find more empirical support for the hypothesis.

[52] The perfective predicates presumably retain this property of their passive ancestors; a diachronic residue, as it were.

account do not readily extend to Kashmiri. First, Mahajan provides evidence to argue that in Hindi the passive agent (*by*-phrase) is the subject and the theme the object; Kashmiri, however, behaves like English in the relevant respect (see (97) above). Second, Mahajan assumes that perfect participles are not structural Case assigners. This is not true for Kashmiri (recall the discussion in section 6.3.4); evidence was shown that accusative is indeed assigned by the verb if there is no other way for the Theme object to get Case. Third, he assumes that ergative is a lexical Case assigned by a transitive perfective predicate, just as instrumental is assigned by the verbal complex, i.e., by the verb plus the passive auxiliary. Ergative in Kashmiri is not lexical (inherent [Goal] or semantic [specific]);[53] it is assigned structurally by transitive perfective (Verb [+perf]) predicates (cf. Lyle 1997).[54] I claim that ergative Case (assigned only to Agents) is not quirky/lexical; it is in fact conditioned by factors which are not represented in the predicate argument structure; factors such as Aspect (or Tense [PAST] in Pashto, Kurdish, etc).

For ergative constructions, shown in (99) below, I suggest that the morphological ergative Case is assigned by the functional head, Aspect, in the manner shown in (100) below: the aspect must be specified [+Perf] in order to assign ergative Case. In other words, I follow Mahajan (1995) in assuming that the perfect predicate assigns ergative Case to the subject; however, I suggest that this Case is assigned structurally by the V+Asp+v complex to the Spec-vP; it is not lexically assigned, as Mahajan assumes.

(99)	laRk-an	par	yi	kitaab
	boy(E)	read-f,sg	this(N)	book(N,f,sg)

The boy read this book.

---

[53] In Hindi-Urdu, Ergative Case is tied to the semantic property of volitionality (conscious choice) in works of Mohanan (1990), Butt & King (1991), and Butt (1993a). Consider (i) and (ii) below. The choice of nominative or ergative in (i) and (ii) below is only a reflex of the aspect (-Perf => nominative; +Perf =>ergative) since the predicate requires the subject argument to be (equally) "volitional".

(i)	ramésh	chu	tas koryi	wunkin	bina vajah	tang karaan
	Ramesh(N)	is	that girl(D)	right now	without reason	teasing

Ramesh is teasing that girl right now without any reason (for him to do so).

(ii)	ramesh-an	kor	raath	tas korya	bina vajah	tang.
	Ramesh(E)	did	yesterday	that girl(D)	without reason	tease.

Ramesh teased that girl yesterday without any reason (for him to do so).

[54] I will assume that the morphological Ergative marking on NP is linked to certain lexical specifications of the perfective morpheme, which may be what Mahajan has in mind when he calls ergative Case "lexical."

(100) Ergative Assignment

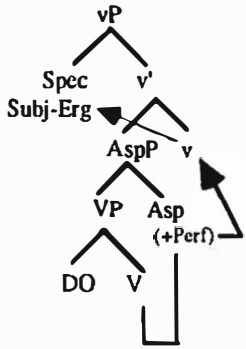

(101) Subject and Object Movement

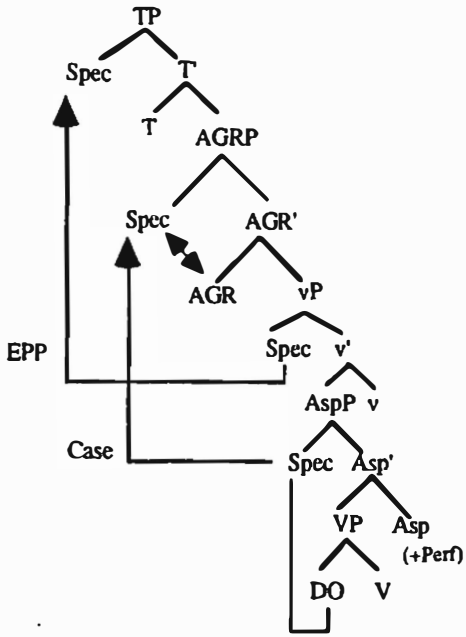

As shown in (101) above, the Theme object moves to Spec-AGRP to get (nominative) Case and check its D-feature. Any further movement of the object DP is forbidden by economy. As discussed earlier in section 6.4.2.3, object movement to Spec-AGRP does not constitute a violation of "Shortest Move" (Chomsky 1993) because verb movement to AGR renders both Spec-VP and Spec-AGRP equidistant from the complement position of the verb. The ergative DP raises directly from Spec-vP to Spec-TP, to satisfy the EPP (check the strong D-feature in T). Again, this movement does not constitute a violation of Shortest Movement either because the adjunction of AGR to T permits the subject to skip the intervening Spec-AGRP.

6.5 NOMINATIVE OBJECTS IN NATURAL LANGUAGE GRAMMARS

It is fairly well established now that nominative objects receive their Case from Infl (den Besten 1985, Sigurðsson 1989, Cowper 1988, Belletti & Rizzi 1988, Marantz 1991a, Dubinsky 1992, Sells 1992). There is, however, a family of proposals trying to show just how it is accomplished. For German, den Besten (1985) assumes that nominative objects receive their Case *in situ* from Infl via a special mechanism of "Chain Government."[55] For Icelandic, Sigurðsson (1989) assumes a similar analysis. He proposes that non-Case-assigning heads do not count as closer governors (for purposes of relativized minimally) and, hence, do not block Infl from assigning nominative Case to objects. Harbert and Toribio (1991) assume an *in situ* strategy for nominative Case assignment on objects in Icelandic via the mechanism of Chain coindexation. Cowper (1988) and Marantz (1991a), on the other hand, assume that the object in Icelandic moves to the empty Spec-VP from where Infl assigns nominative to them via the mechanism of ECM. For the Italian *piacere* -class of psych verbs, Belletti and Rizzi (1988) assume that the Theme NP adjoins to VP and gets Case locally from Infl. A similar analysis is proposed by Dubinsky (1992) for nominative objects in Japanese. All of these analyses, however, have one thing in common — they all assume that nominative objects reside within (inside or adjoined to) VP at S-Structure.

The Kashmiri data suggest that the position where nominative objects are licensed must be above vP and below TP, a position I claimed is

---

[55] According to den Besten (1985:42):

a. If NP_i is governed by a category which cannot or may not assign Case, NP_i will acquire its Case from the first Case-assigner up by which it is chain governed.

b. α chain-governs β iff α governs $\gamma 1$, $\gamma 1$ governs $\gamma 2$, ..., γ n-1 governs γn, and γn governs β ($n \geq 1$).

Spec-AGRP. This conclusion was forced by several empirical facts: briefly, that there is one and only one source of nominative per clause; that at S-Structure, nominative DPs are outside of vP in an A-position; that the nominative DP controls verb agreement. Thus, it was argued that the nominative subject moves first to Spec-AGRP to get Case, triggering predicate agreement in the process, and then moves to Spec-TP to satisfy the EPP (= to be licensed as the subject of the clause). A similar argument was made for nominative object DPs in Kashmiri: the verb does not assign Case to them, so they move to Spec-AGRP at S-Structure to get Case, triggering predicate agreement in the process.

In the next subsections, I will show how this account of nominative Case assignment (and the associated verb agreement) explains the distribution of nominative objects in natural languages. For purposes of illustration, I choose Hindi, Inuit, Icelandic and Japanese.

6.5.1 Nominative Objects in Hindi

Nominative objects in Hindi have been argued to appear outside of VP at S-Structure (Mahajan 1990). Mahajan's (1990:69) theory of Case is tied to two visibility conditions (102):

(102a) LF visibility condition: requires all NPs (or chain to bear a structural Case.

(102b) S-Structure visibility condition: requires all NPs (or chains) to have Case (inherent or structural)

Thus, for a sentence like (103), Mahajan claims that the direct object must move out of VP to get structural Case (due to 102b) since the verb is a nonstructural Case assigner.

(103)

Raam-ne	rooTii	khaa-yii
Ram(E,m,sg)	bread(N,f,sg)	ate(f,sg)

Ram ate the bread.

By moving only the direct object *rooTii* out of the VP for Case-theoretic reasons at S-Structure, his theory makes the undesirable prediction that (104) [O-S-V] and not (103) should be the unmarked word order in Hindi (at least in perfective transitive clauses).

(104)

rooTii	Raam-ne	khaa-yii
bread(N,f,sg)	Ram(E,m,sg)	ate(f,sg)

Ram ate the bread [Lit. As for bread, Ram ate it]

The situation can be salvaged by assuming with us that the inherently Case-marked NP in (104) must nevertheless move to satisfy the EPP (to be licensed as subject), a Checking requirement. In so doing, Mahajan has to relinquish the assumption that inherently Case-marked NPs need structural Case only at LF.

6.5.2 Nominative Objects in Inuit

Bok-Bennema (1991) notes that direct objects in Inuit scramble out of the VP to a position in the local domain of Infl to be assigned nominative directly by Infl. She also notes that the subjects of transitive verbs, albeit marked with a different Case (genitive), occur in the same S-Structure position as the subjects of intransitive verbs (Spec of IP). She concludes that nominative Case in transitive clauses is assigned in the following configuration (105):

(105)

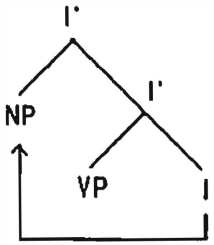

Thus Bok-Bennema argues that nominative Case is assigned to direct objects in the adjunct position NP of I' and that it is this position to which object NPs scramble out. The big problem in this approach has to do with the adjunction of direct objects to intermediate projections — an undesirable consequence for her theory since such adjunctions are excluded in the framework she is assuming. The other problem has to do with nominative Case assignment via adjunct-head agreement (Bok-Bennema 1991:216). I know of no other language that requires nominative Case assignment in this fashion. In order to mitigate both the problems, I suggest that even in Inuit, the nominative in transitive clauses is assigned in the same way as it is assigned in intransitive clauses, via Spec-Head agreement in the AGRP projection. The genitive in transitive clauses is presumably assigned in the normal way in the TP projection, as she notes, via Spec-Head agreement.

6.5.3 Nominative Objects in Icelandic

In Icelandic, as in Kashmiri, nominative subjects and nominative objects are in complementary distribution (cf. Taraldsen 1995, *inter alios*). Icelandic, however, differs from Kashmiri in that it has a third person restriction on nominative object DPs: they agree only in number with the verb, whereas the nominative subject agrees in both person and number with the verb (Sigurðsson 1991, Taraldsen 1995, Burzio 1995, Vangsnes 1995). Taraldsen thus accounts for this asymmetry by splitting AgrS into two autonomous nodes, Agr_P (person agreement) and Agr_N (number agreement), and then allowing the licensing of nominative Case in Spec-Agr_N. I incorporate this insight in the theory of Case developed here by assuming that the Tense projection in Icelandic hosts the person feature and a nonoblique DP can trigger that agreement in its Spec, i.e., Spec-TP. Further, I suggest that AGRP in Icelandic is where nominative Case is assigned and where number agreement is established. In nonquirky constructions, subject DPs move to Spec-AGRP to get (nominative) Case and to trigger number agreement. They move up to Spec-TP to satisfy the EPP, and in so doing they also trigger person agreement.

Harbert and Toribio (1991) and Sigurðsson (1991) have argued that nominative objects in Icelandic quirky constructions like (106) receive their Case *in situ*.

(106)	honum	voru sold	drengirnir
	him(D)	were sold	boys-the(N)

The boys were sold to him.

If their cliams can be maintained, then the question this raises is the following: What accounts for the fact that some languages choose an *in-situ* strategy for nominative Case assignment to Theme NPs (Icelandic), while other languages, such as Kashmiri, require that these objects move out of VP to get nominative Case.

I believe the difference between Kashmiri, where nominative objects move out of VP, and Icelandic, where nominative objects may remain *in situ*, derives from what I call the Canonical Government Condition (CGC), stated informally in (107).[56]

[56] The intuition here is that when CGC obtains, then object NPs can exercise their option to stay *in situ* as perhaps mandated by Procrastinate. When CGC does not obtain, as in Kashmiri, the object NPs do not have a choice, and thus need to move to a position where they can get Case.

(107) Canonical Government Condition: Case assignment under government respects the language-particular directionality parameter.

Assuming that VP is not a barrier to government, AGR (or AGR in Infl) can assign Case to the theme NP, as long as there is no Case assigner that can count as a closer governor, a mechanism tied to relativized minimality government along the lines suggested in Sigurðsson (1989) and den Besten (1985). According to them, in cases where (e.g., unaccusative and passive) verbs fail to assign Case to their complements, Infl (the governor of VP) inherits the Case assigning ability to the object by local chain-government.[57] This is, however, an option available in Icelandic because the Case assigner is to the left of VP: Case assignment under government is right directional. The Infl (or AGR) in Icelandic can assign Case to the VP-internal position to its right since the CGC (107) is respected.

In Kashmiri government is left directional, as argued in chapter 3, but AGR is to the left of VP, and hence AGR is not able to govern into the VP even when the verb does not assign Case. As a result, in Kashmiri, nominative objects must move out of VP to Spec-AGRP to get Case.

6.5.4 Nominative Objects in Japanese

Dubinsky (1992) argues that in Japanese sentences such as (108), the potential verb *eru* 'able' optionally assigns inherent dative Case to its Experiencer, the subject. The direct object moves out of VP, to the VP-adjoined (crucially, in his terms, an A'-) position, to get nominative Case from Infl under government.

(108) Tomiko ni eigo ga yom-eru
(D) English(N) read able

Tomiko can read English.

Dubinsky's account can be reinterpreted in the present framework by claiming that the direct object in (108) moves to Spec-AGRP where it receives nominative Case in the standard way.[58] This reinterpretation

[57] Lee 1992 discusses the notion of Case Minimality Condition, which shares the basic insight of den Besten and Sigur sson account.

[58] In cases where both the subject and the object are nominative, Dubinsky argues that Infl assigns nominative to subject in Spec-IP and to object in VP-adjoined position. In the present framework, I will assume that both subject and object are Case-marked nominative in outer and inner Specs of AGRP. The subject moves further up to Spec-

then eliminates the possibility in UG of Case-marking (or, checking) in an A-bar position.

6.6 CONCLUSIONS

In this chapter, an argument was made that derived (S-Structure) subjects in Kashmiri occupy Spec-TP, whereas the objects occupy different positions depending on their Case. It was argued that nominative objects move to an A-position, dative objects move to an A'- position, whereas accusative objects remain *in situ*. Arguments were also presented to claim that the A-position to which nominative objects move is above VP but crucially below TP. This position, intermediate between TP and VP, was called AGRP.

I also argued that all the facts of Case in Kashmiri follow naturally from the assumption that nominative is assigned in the Spec-AGRP. Further, a restrictive theory of Case and Checking was proposed. It requires that argument NPs need to be not only Case-assigned, but also must have their D-feature checked. These assumptions give a straightforwad account of Psych movement: the dative nominal in DSCs move to subject position in order to check its D-feature (to satisfy the EPP. The nominative Theme NP moves to AGRP-Spec to be Case assined/checked. The same analysis holds for ergative clauses, where the ergative nominal moves for D-feature checking in Spec-TP and the nominative Theme nominal moves to Spec-AGRP for Case checking.

The Case proposal outlined above also explains an important cross-linguistic generalization that, unlike ergatives, quirky subject Cases are not assigned to Agents, but to Experiencers and Themes (Levin & Simpson 1981). I have argued that just as certain predicates assign morphological accusative to the position they govern (=c-command), perfect predicates assign morphological ergative to the position they govern, the vP-Spec which host Agents. On the other hand, the realization of Experiencer arguments is not specified due to the prominence mismatches between thematic and aspectual dimensions (cf. Grimshaw 1990:93-40), and therefore, other mechanisms of argument realization must be sought. One plausible alternative, of course, is lexical specification accomplished by the assignment of a lexical dative Case.

TP, to satisfy the EPP.

CHAPTER 7
EPILOGUE

The account of finite verb movement presented in this book is by no means complete. This study investigated some theoretical and empirical issues in the syntax of finite verb movement to clause-second position, as well as providing a detailed syntactic analysis of an unfamiliar language. A brief résumé of accomplishments of the study is in order. First, it provided an opportunity to examine and ascertain the limitations of the current models of V2 grammar in light of new, typologically different data. Second, it presented a parametric account of V2 and explored its consequences for a general theory of verb movement, mainly in terms of triggers, landing sites, and clause structure. Third, it explored a generalized theory of Case that was able to locate the structural positions where primary grammatical functions (subject, object, etc.) are licensed. And finally, it established a more informed typology of V2 languages in generative grammar.

Up until now, it has been standardly assumed that all Germanic languages, with the exception of English, are verb-second, which has been described as the movement of the finite verb to the highest functional head position (=Comp) in the root clauses. A full-length investigation of the syntax of Kashmiri demonstrates that the phenomenon of verb-second is not specific to the Germanic family. The presence of the V2 phenomenon observed in Kashmiri gives reason to speculate that perhaps there are more V2 languages outside of the Germanic family, and if so they need to be investigated in order to establish a more informed typology of these languages. Some efforts toward that end have in fact been reported. In a relatively recent study, Hendriksen (1991) has identified two dialects of Himachali, Kotg̱aṛhi and Koci, that exhibit properties of V2 similar to Kashmiri. The root contexts in these dialects show V2 (see (1) and (2) below), whereas subordinate contexts show clause-final verb stranding (see (3) and (4) below).

(1)	Kotg̱aṛhi:	be:r	pɔṛI	merɛ	a:dz
		delay	fell	to-me	today

I have been delayed today.

(2) Koci: aũ caṇu a:dz roṭi
I prepare today food

I prepared the food today.

(3) Koṭgaṛhi: dzɛbɛ: thoṛi du:r sɛ ḍeuɛ ...
when little distance they gone

When they had gone a little distance ...

(4) Koci: dzab:e tum:a eth re bare dzaṇno itsaa,
when you t his matter know want,

tab:e
then

If you want to know (hear) about this matter, then ...

Further, Hendriksen (1991:164) notes, without presenting any empirical evidence however, that the finite verb in subordinate clauses introduced by the complementizer *ki* 'that' is, like Kashmiri, in the same position as in main sentences. The extent to which the results of the present investigation may carry over to Koṭgaṛhi and Koci is, of course, an empirical question and must be left to future research.

There are, of course, several other V2-like languages that future research needs to investigate, e.g., the languages belonging to the Pama-Nyungan family of Australia (including Walpiri), as well as the Pimic group of Uto-Aztecan (especially Papago). In order to understand fully the properties of V2 so that ultimately a more informed theory of V2 can be constructed, these languages need to be included.

Within the GB framework, parameters are used to explain cross-linguistic variation and give the theory its predictive power. The methodologically desirable syntactic account in this framework is one that derives surface differences between languages from as few underlying differences as possible. In this study, the account of the variation among V2 languages was based on a simple assumption that V2 is the result of the parametrization of Mood and Subordinate marking. The difference between the German/Dutch type of V2 and the Kashmiri/Icelandic/Yiddish type of V2 was reduced to a fairly small parametric difference in the composition of the complementizers: German/Dutch Comps lexicalize two functions cross-linguistically

associated with the category Comp — Mood and Subordinate marking. Thus V2 is blocked when an overt complementizer is present in subordinate clauses. In Kashmiri/Icelandic/Yiddish, the (traditional) category Comp carries only the subordinating function, and thus in these languages, Mood is realized verbally in matrix **and** subordinate clauses: the finite verb moves to Mood, resulting in V2 order once Spec-MP is filled.

Relatively recently, Zwart (1993), using the Minimalist framework (*`a la* Chomsky 1993), has argued (somewhat in the spirit of Travis 1991a) against the standard hypothesis that in Dutch and German the finite verb **always** moves to C overtly. In his theory, Dutch (and German) have the same syntactic structure as English and French, i.e., underlyingly complements follow their heads (*`a la* Kayne 1994). He argues that in Dutch (and also German, Frisian, Norwegian, Danish, and Swedish) the finite verb moves overtly to AgrS in subject-initial clauses, whereas there is a subsequent movement of AgrS to C only in those cases where nonsubject elements are topicalized to Spec-CP. Although this is an attractive proposal, there are a few empirical and theoretical problems that deserve comments. First, the assumption that "for checking of the N-feature of AgrS to take place, both Spec-AgrS and AgrS itself must be lexically filled" is theoretically unmotivated. The facts of English have clearly demonstrated that the subject moves overtly to Spec-AgrS (for feature checking) without involving any verb movement to AgrS, an unexpected result in Zwart's theory. Even if we assume that only V2 languages require licensing heads to be lexical, then this property must be shown to follow from some independent syntactic principles, and some account must be proposed for blocking verb movement in the declarative clauses of English. Second, the equation that relates checking of the (strong) N-feature of AgrS to Nominative Case/subject agreement licensing, which Zwart crucially assumes, is empirically invalidated in all those (quirky) constructions where the nonnominative (nonverb-agreeing) subject occupies Spec-AgrS (cf. chapter 6). Further, in Swedish, which has no subject-verb agreement (no [+N] Agr, cf. Holmberg & Platzack 1991), Zwart's account will make the incorrect prediction that V2 will not take place overtly. Third, Zwart argues that lexicalization of AgrS in embedded contexts is accomplished by moving AgrS to (overt) C, rendering verb movement to AgrS superfluous and, therefore, blocked by Economy. The unfavorable empirical consequence of this argument is demonstrated by the fact that in Mainland Scandinavian languages optional V2 is possible only in the presence of a complementizer, as shown in (5) below (Danish data, from Reinholtz 1993).

(5a) Peter tror [at den film$_j$ har$_i$ Maria aldrig t_i
Peter thinks that that film has Maria never

set t_j
seen

Peter thinks that that film, Maria has never seen.

(5b) Peter tror [at Maria aldrig har set den film
Peter thinks that Maria never has seen that film

Peter thinks that Maria has never seen that film.

(5c) *Peter tror [den film$_j$ har$_i$ Maria aldrig t_i
Peter thinks that film has Maria never

set t_j
seen

Peter thinks that film, Maria has never seen.

Zwart's account makes incorrect predictions for the above data; it wrongly predicts (5a) to be ungrammatical and (5c) to be grammatical. The fact that (5c) is the only bad sentence makes Zwart's Agr to C account suspicious. The account provided by Reinholtz (1991) of *at* 'that' can be accomodated in our theory of V2 presented in Chapter 5. She argues (1991:473) that *at* is "the only available item for subordination purposes." Further, she argues that *at* is base-generated in either the head of a functional category between Comp and the subject, corresponding to Mood in our terms, blocking V2, or it is present in Comp (the head of the subordinate phrase), allowing V2 (1991: 470). Thus, the optional behavior of V2 found in Mainland Scandinavian languages is accounted for in an analysis like ours that recognizes subordination and mood-marking as two distinct functions of Comp that are either conflated and lexicalized by the same lexeme (e.g., English), or assigned to separate lexemes (e.g., Kashmiri).

Finally, a restrictive theory of V2 has to address the question Koopman (1995) raises: Why do some finite verbs (in Dutch) not move to clause-second position? Although I do not have much to say on the issue, except perhaps to accept her receptor-binding theory — the particular instantiation of how checking of lexical properties is achieved (ibid: 1994, 1995). However, more research is needed to explore fully the consequences of her theory (see Uriagereka 1994 for some comments).

Turning now to the question of what triggers XP movement to clause-initial (Spec of highest functional head) position to give the V2 order, it seems some progress has been made in the recent past. In Kashmiri, we observed that the preverbal position is always the Focus position. Assuming [+Focus] to belong to the set of plausible operators (cf. Chomsky 1993:32), raising of an XP to Spec-MP is driven by the morphological necessity to check the strong [+Focus] feature in the checking domain of M. A somewhat similar suggestion was made by Santorini (1989) for Yiddish. She uses the [+Top] feature to motivate XP-movement to clause-initial position. Travis (1991a) and Zwart (1993) claim that root clauses are generated differently depending on whether the constituent that precedes it is a subject or a nonsubject. In their account, V2 is verb movement to Infl (AgrS) in subject-initial clauses, whereas in nonsubject-initial clauses topicalization triggers inversion, hence V2 is movement to Comp. Thus, Travis crucially (and also Zwart) takes (6a) to be a subject-initial V2 clause, and (6b) as a nonsubject-initial V2 clause.

(6a) $[_{IP}$ Die Kinder *haben* $_i$ $[_{VP}$ das Brot gegessen t_i]]
The children have the bread eaten

(6b) $[_{CP}$ Heute$_j$ *haben*$_i$ $[_{IP}$ die Kinder t_i $[_{VP}$ das Brot t_j
Today have the children the bread

gegessen t_i]]]
eaten

Now this account does not readily account for the Kashmiri data discussed in chapter 4. In Kashmiri, clause-initial elements appear stressed; the only exceptions are constructions which have either subjects (7a) or temporal adverbs (7b) in the clause-initial position. Any other constituent in this position appears with sentential stress (7c).

(7a) rameshas cha azkal shiilaa khosh karaan
Ramesh is these days Sheila happy do-NPerf

(i) Ramesh likes Sheila these days.
(ii) [With a slight pause after *Ramesh*] As for Ramesh, he likes Sheila these days.

(7b)

azkal	cha	rameshas	shiilaa	khosh	karaan
these days	is	Ramesh	Sheila	happy	do-NPerf

(i) These days Ramesh likes Sheila.
(ii) [With a slight pause after *these days*] As for these days, Ramesh likes Sheila.

(7c)

shiilaa	cha	rameshas	azkal	khosh
Sheila	is	Ramesh	these days	happy

karan
do-NPerf

It is Sheila whom Ramesh likes these days.

The data in (7), especially the fact that temporal adverbs pattern with subjects, is problematic for the assumptions that underlie Travis's (and Zwart's) account, as given in (6) above.[1]

There is also the question of how the V2 facts in Kashmiri and the West Germanic languages that have been traditionally analyzed as SOV are going to work out if Kayne (1994) is correct. In his view, there is no variation in the head-complement order, and what are superficially SOV languages, such as Kashmiri and German, are underlyingly head-initial languages. In languages like Kashmiri and German, then, where the complement precedes the verb, the surface order is derived by leftward movement of the complement to a specifier position. Zwart (1993) has argued Dutch to be head-initial above VP, much like Kashmiri where all functional heads above VP are head-initial too. In Kashmiri, if we assume with Kayne (1994) that heads always precede their associated complement positions underlyingly, we will have to assume the vacuous leftward movement of complements of lexical heads to their Specifier positions, contra the economy principle Procrastinate (Chomsky 1993). But the advantage in assuming Kayne's proposal is that it allows us to dispense with the special status of the postverbal *ki*-clause in Kashmiri. We have nothing more to say for its distribution except that it appears in the complement position. We will, however, need to explain this odd syntactic behavior of Kashmiri. If the complements of heads move leftward in Kashmiri, why doesn't the *ki*-clause move leftward to some adjoined A-bar position? In other words, we need to account for what blocks the leftward movement of these clauses. Future research needs to address this question for

[1] Thanks to Beatrice Santorini for bringing my attention to it.

Kashmiri, and perhaps for other Indo-Aryan languages that have been traditionally analyzed as SOV.

Kayne's hypotheses, that Specifier-Head-Complement is the only available order of constituents and that leftward movement is the only possible instance of Move- α, does find empirical support in Kashmiri. In chapter 6, it was observed that objects in Kashmiri always move leftward: nominative and dative objects move out of VP, whereas accusative objects move to Spec of the inner (VP-internal) Aspect. If our analysis of object movement is on the right track, then it is possible to assume with Kayne that perhaps underlyingly Kashmiri is S-V-O with subsequent leftward object movement, yielding the surface S-O-V order. Zwart (to appear) has in fact argued that Dutch, traditionally analyzed as head-final (Koster 1975), is indeed head-initial.[2]

In assuming S-V-O structure for Kashmiri however, we run the risk of abandoning the well-established typological generalization outlined in Mahajan (1994): SVO languages are never ergative; Ergativity is found only in SOV or VSO languages (cf. also Schwartz 1972, Trask 1979, Dasgupta 1984). Mahajan derives the generalizations underlying ergativity by assuming different structures for ergative (6a) and nonergative (6b) languages — note that the crucial assumption is the adjacency and non-adjacency of subject and Aux.

(6a)

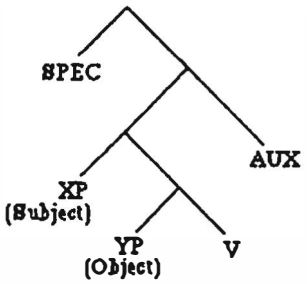

(6b)

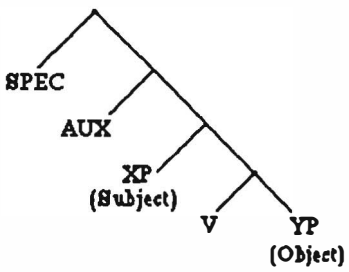

Following the suggestion in Kayne (1993) and Freeze (1992), Mahajan argues that ergative subjects in SOV languages are generated as oblique subjects, i.e., subjects appear with an unincorporated P

[2] Although I do not have access to his paper, the title is quite suggestive "Dutch is head-initial," and further secondary sources like Kayne (1994), Koopman (1995), Haeberli and Haegeman (1995) lead me to believe that Zwart has claimed Dutch to be head-initial.

(adposition). In SVO languages, P gets incorporated to the adjacent Aux *be* to yield *have:* the subject appears as nominative.

Mahajan's account of Ergativity relies crucially on word order (see 6 above) to explain why Hindi (Aux-final) is ergative and the Aux always appears as *be*. This account is problematic for Kayne's (1994) hypothesis that the S-H-C order is universal. In the following, I will attempt to salvage Kayne's idea by showing that adjacency of Subject and Aux (6b above) may not be the necessary condition for incorporation to take place, as the Kashmiri facts indicate.

Kashmiri is a split ergative language (cf. chapter 2) and, like other ergative languages, it lacks a verb corresponding to Romance/Germanic *have* (Zakharyin 1984). Aux in Kashmiri is adjacent to the subject which should permit incorporation of P into Aux, yielding *have*. But the Kashmiri facts point elsewhere. There must be some other mechanism to block incorporation in Kashmiri. The alternative Mahajan suggests is more appealing: Aux-subject agreement permits incorporation of P from the subject into Aux. In languages like Kashmiri, Hindi, etc., where the object agrees with Aux in transitive perfective clauses, incorporation of P from the subject into Aux is blocked, yielding ergativity. The Incorporation-blocking theory, namely, that object-Aux agreement blocks P incorporation, works for Kashmiri, French, Hindi, German and Dutch. In view of these facts we may have to dispense with an analysis of language variation which, with regard to ergativity, makes reference to linear precedence. The fact that word order/adjacency conditions on incorporation do not work for Kashmiri (and German) strengthens Kayne's ideas.

Although Kashmiri provides some empirical support for the conceptual arguments in Kayne (1994), more research on lesser known languages like Kashmiri, which show mixed word order properties, will tell whether his hypothesis will be supported or repudiated.

REFERENCES

Abney, Steve. 1987. The English Noun Phrase in its Sentential Aspect. Ph.D. dissertation, MIT, Cambridge, Mass.

Adams, Marianne Patalino. 1987 Old French, Null Subjects and Verb Second Phenomena. Ph.D. dissertation, University of California, Los Angeles.

Anderson, S.R. 1977. On Mechanisms by Which Languages Become Ergative. In C.N. Li (ed.), *Mechanisms of Syntactic Change*. Austin: University of Texas Press. 317-363

Anderson, T. 1988. Ergativity in Pari, a Nilotic OVS language. *Lingua*, 75. 289-324.

Andersson, L.-G. 1975. *Form and Function of Subordinate Clauses*: Monographs in Linguistics I, Department of Linguistics, University of Gothenburg.

Andrews, Avery. 1990. Case Structures and Control in Modern Icelandic. In Joan Maling and Annie Zaenen (eds.), *Modern Icelandic Syntax, Syntax and Semantics vol. 24* San Diego: Academic Press. 187-234.

Authier, J.-Marc. 1992. Iterated CPs and Embedded Topicalization. *Linguistic Inquiry*, 23, 2. 329-336.

Baker, Mark. 1988. *Incorporation: A Theory of Grammatical Function Changing*. Chicago: University of Chicago Press.

Baker, Mark. 1991. On Some Subject/Object Non-Asymmetries in Mohawk. *Natural Language and Linguistic Theory*, 9. 537-576.

Baltin, Mark. 1982. A Landing Site Theory of Movement Rules. *Linguistic Inquiry*, 13, 1. 1-38.

Bayer, Josef. 1983. Toward an Explanation of Certain *that-t* Phenomena: The Comp Node in Bavarian. In Wim de Geest and Yvan Putseys (eds.), *Sentential Complementation*. Dordrecht: Foris. 23-32.

Bayer, Josef. 1984. COMP in Bavarian Syntax. *The Linguistic Review*, 3, 3. 209-274.

Bayer, Josef. 1990. Directionality of Government and Logical Form: A Study of Focusing Particles and *Wh*-Scope. Ph. D dissertation, Universitat Konstanz.

Belletti, Adriana and Luigi Rizzi. 1988. Psych Verbs and θ-theory. *Natural Language and Linguistic Theory, 6*. 291-352.

Bennis, Hans and Liliane Haegeman. 1984. On the Status of Agreement and Relative Clauses in West Flemish. In Wim de Geest and Yvan Putseys (eds.) *Sentential Complementation*. Dordrecht:Foris. 33-53.

Benveniste, Emil. 1974. *O nekotorykh formakh razvitija indoevropejskogo perfekta* (On some lines of the develoment of the Indo-European perfect). Moscow: Obschaja Linguistika.

Benveniste, Emil. 1966. *Problems in general linguistics*. University of Miami Press.

Besten, Hans den. 1977. On the Interaction of Root Transformations and Lexical Deletive Rules. ms. University of Amsterdam.

Besten, Hans den. 1983. On the Interaction of Root Transformations and Lexical Deletive Rules. In W. Abraham (ed.), *On the Formal Syntax of the Westgermania*. Amsterdam: John Benjamins. 47-138.

Besten, Hans den. 1985. The Ergativity Hypothesis and Free Word Order in Dutch and German. In J. Toman (ed.), *Studies on German Grammar*. Dordrecht: Foris.

Besten, Hans den and Gert Webelhuth. 1987. Remnant Topicalization and the Constituent Structure of the VP in the Germanic SOV Languages. Paper presented at GLOW, Venice 1987.

Bhatt, Rajesh and Elena Anagnostopoulo. 1996. Object Shift and Specificity: Evidence from *ko*-phrases in Hindi. *Papers from the 32nd Regional Meeting of the Chicago Linguistic Society*, . 11-22.

Bhatt, Rakesh M. 1991. Dative Subjects and Retreats in UG. *Proceedings of Western Conference on Linguistics*, 4. 48-59.

Bhatt, Rakesh M. 1995. On Experiencers and Subjects of Perfect Predicates. *Studies in the Linguistic Sciences*, 24, 1/2. 73-84.

Bhatt, Rakesh M. 1993a. Nominative Objects in Kashmiri. Paper presented at the Linguistic Society of America meeting, Los Angeles, CA, January 7-10.

Bhatt, Rakesh M. 1993b. Psyched out-Analysing quirky constructions. *Papers from the 29th Regional Meeting of the Chicago Linguistic Society*, 77-88.

Bhatt, Rakesh M. 1994. The Case of Quirky Constructions. In Alice Davison et al. (eds.), *Papers from the Fourth Annual Meeting of the Formal Linguistics Society of MidAmerica*. 20-34.

Bhatt, Rakesh M. and James Yoon. 1992. On the Composition of Comp and Parameters of V2. In D. Bates (ed.), *Proceedings of WCCFL X*.. Stanford: CSLI. 41-52.

Bittner, Maria and Ken Hale. 1994. The Structural Determination of Case. ms. MIT.

Bittner, Maria and Ken Hale. 1996. The Structural Determination of Case and Agreement. *Linguistic Inquiry*, 27. 1-68.

Bobaljik, Jonathon D. and Dianne Jonas. 1996. Subject positions and the Roles of TP. *Linguistic Inquiry*, 27, 2. 195-236.

Bok-Bennema, R. 1991. *Case and Agreement in Inuit*. Berlin: Foris.

Bresnan, Joan. 1972. Theory of Complementation in English Syntax. Ph.D dissertation, MIT, Cambridge, Mass.

Brody, Michael. 1990. Some Remarks on the Focus Field in Hungarian. *University College London Working Papers in Linguistics*, 2. 201-225.

Burton, Strang and Jane Grimshaw 1992. Coordination and VP-internal Subjects. *Linguistic Inquiry*, 23, 2, 305-313.

Burzio, Luigi. 1986. *Italian Syntax*. Dordrecht: D. Riedel.

Burzio, Luigi. 1995. Anatomy of a Generalization. ms. Johns Hopkins University.

Butt, Miriam. 1993a. The Structure of Complex Predicates in Urdu. Ph.D. thesis, Stanford University.

Butt, Miriam. 1993b. Object Specificity and Agreement in Hindi/Urdu. *Papers from the 29th Regional Meeting of the Chicago Linguistic Society*, 89-103.

Butt, Miriam and Tracy King. 1991. Semantic Case in Urdu. In *Papers from the 27th Regional Meeting of the Chicago Linguistic Society*, 31-45.

Cardinaletti, Anna and Ian Roberts. 1990. Clause Structure and X-Second. ms, University of Venice and Geneva.

Carrier-Duncan, Jill. 1985. Linking of Thematic Roles in Derivational Word Formation. *Linguistic Inquiry*, 16. 1-34.

Chatterji, Suniti Kumar. 1963. *Languages and Literature of Modern India.* Calcutta.

Chomsky, Noam. 1965. *Aspects of the Theory of Syntax.* Cambridge: MIT Press

Chomsky, Noam. 1973. Conditions on Transformations. In S. Anderson and P. Kiparsky (eds.), *A Festschrift for Morris Halle.* New York: Rinehart and Winston.

Chomsky, Noam. 1981. *Lectures on Government and Binding.* Dordrecht: Foris.

Chomsky, Noam. 1982. *Some Concepts and Consequences of the Theory of Government and Binding.* Cambridge, Mass: MIT Press

Chomsky, Noam. 1986a. *Knowledge of Language.* New York: Praeger

Chomsky, Noam. 1986b. *Barriers.* Cambridge: MIT Press.

Chomsky, Noam. 1989. Some Notes on Economy of Derivation and Representation. In I. Laka and A. Mabajan (eds.), *MIT Working Papers in Linguistics*, 10. 43-74.

Chomsky, Noam. 1991. Some Notes on Economy of Derivation and Representation. In Robert Freiden (ed.), *Principles and Parameters in Comparative Grammar.* Cambridge: MIT Press. 417-454.

Chomsky, Noam. 1993. A Minimalist Program for Linguistic Theory. In Ken Hale and Samuel Jay Keyser (eds.), *The View from Building 20.* Cambridge, Mass.: MIT Press. 1-52.

Chomsky, Noam. 1995. *The Minimalist Program.* Cambridge, MA: MIT Press.

Chomsky, Noam and Howard Lasnik. 1993. The Theory of Principles and Parameters. In J. Jacobs, A. von Stechow, W. Sternefeld, and T. Vennemann, (eds.), *Syntax: An International Handbook of Contemporary Research.* Berlin: de Gruyter.

Cowper, Elizabeth. 1988. What is Subject? Nonnominative Subjects in Icelandic. *Proceedings of the North Eastern Linguistic Society, 18.*

Dasgupta, Probal. 1984. On Certain Clause Types. *Melbourne Working Papers in Linguistics, Number 10.*

Davison, Alice. 1988. The Case Filter as Motivation for Move Alpha. In V. Srivastav, J. Gair, and K. Wali (eds.), *Cornell Working Papers in Linguistics 8.* N.Y.: Cornell University.

Davison, Alice. 1991. Finiteness and Case in Hindi-Urdu Complements. Paper Presented at the 13th South Asian Language Analysis Conference, University of Illinois, May 25-27, 1991.

Davison, Alice. 1992. Lexical Projection, Case and Clause Adjunction: Another View of 'Case Resistance'. ms. University of Iowa.

deHaan, Germen and Fred Weerman. 1986. Finiteness and Verb Fronting in Frisian. In H. Haider and M. Prinzhorn (eds.), *Verb Second Phenomena in Germanic Languages.* Dordrecht: Foris. 77-110.

De Hoop, Helen. 1996. *Case Configuration and Noun Phrase Interpretation.* New York: Garland.

DeHoop, Helen and Wim Kosmeijer. 1995. Case and Scrambling: D-structure versus S-structure. In Hubert Haider, Susan Olsen, and Sten Vikner (eds.), *Studies in Comparative Germanic Syntax*. Dordrecht: Kluwer Academic Press. 139-158.

Deprez, Viviane. 1989. On the Typology of Syntactic Positions and the Nature of Chains: Move-alpa to the Specifier of Functional Projections. Ph. D dissertation, MIT, Cambridge, Mass.

Diesing, Molly. 1988. Word Order and the Subject Position in Yiddish. *Proceedings of the North Eastern Linguistic Society, 18*. 124-140.

Diesing, Molly. 1990. Verb Movement and the Subject Position in Yiddish. *Natural Language and Linguistic Theory*, 8. 41-79.

Diesing, Molly. 1992. Bare Plural Subjects and the Derivation of Representations. *Linguistic Inquiry*, 23, 2. 353-380.

Dubinsky, Stanley. 1992. Case Assignment to VP-Adjoined Positions: Nominative Objects in Japanese. *Linguistics*, 30. 873-910

Enç, Murvet. 1991. The Semantics of Specificity. *Linguistic Inquiry*, 22. 1-25.

Farmer, Ann. 1984. *Modularity in Syntax*. Cambridge: MIT Press

Fodor, Jerry D. and Ivan Sag. 1982. Referential and Quantificational Indefinites. *Linguistics and Philosophy* 5, 355-398.

Freeze, Ray. 1992. Existentials and Other Locatives. *Language*, 68. 535-595.

Frieden, Robert and Rex Sprouse. 1991. Lexical Case Phenomena. In Robert Freiden (ed.), *Principles and Parameters in Comparative Grammar*. Cambridge: MIT Press. 392-416.

Fukui, Naoki. 1986. A Theory of Category Projection and its Applications. Ph.D dissertation, MIT, Cambridge, Mass.

Fukui, Naoki. 1993. Parameters and Optionality. *Linguistic Inquiry*, 24. 399-420.

Fukui, Naoki. 1995. The Principles-and-Parameters Approach: A Comparative Syntax of English and Japanese. In Masayoshi Shibatani and Theodora Bynon (eds.), *Approaches to Language Typology*. Oxford: Clarendon Press. 327-372.

Fukui, Naoki and Margaret Speas. 1986. Specifiers and Projections. *MIT Working Papers in Linguistics, 8*. 128-172.

Gair, James. 1990. Subjects, Case and INFL in Sinhala. In M. K. Verma and K.P. Mohanan (eds.), *Experiencer Subjects in South Asian Languages*. Stanford: CSLI 13-42

Gair, James and Kashi Wali. 1989. Hindi Agreement as Anaphor. *Linguistics*, 27. 45-70.

Garrett, Andrew. 1989. Ergative Case-assignment, Wackernagel's Law, and the VP Base hypothesis. *Proceedings of the North Eastern Linguistic Society*, 19. 113-26.

Garrett, Andrew. 1990. The Origin of NP Split Ergativity. *Language*, 66. 261-296.

Georgopoulous, Carol. 1991. Another Look at Object Agreement. In *Proceedings of the North Eastern Linguistic Society, 22*.

Gerdts, Donna. 1988. *Object and Absolutive in Halkomelem Salish*. New York: Garland Publishers.

Gerdts, Donna and C. Youn. 1990. Psych Constructions and Case in Korean. ms.

Givon, Talmy. 1975. Serial Verbs and Syntactic Change: Niger Congo. In C. Li (ed.), *Word Order and Word Order Change*. Austin: University of Texas Press.47-112.

Grierson, G. M. 1911. *A Manual of the Kashmiri Language*. Oxford: Claredon Press

Grierson, G. M. 1915. The Linguistic Classification of Kashmiri. *Indian Antiquary*, 44. 257-270.

Grierson, G. M. 1919. *The Linguistic Survey of India, vol. vii, Part II*. Calcutta.

Grimshaw, Jane. 1990. *Argument Structure*. Cambridge: MIT Press.

Grimshaw, Jane. 1991. Extended Projections. ms. Brandies University.

Haeberli, Eric and Liliane Haegeman. 1995. Clause Structure in Old English: Evidence from Negative Concord. *Journal of Linguistics*, 31. 81-108.

Haegeman, Liliane. 1991. *Introduction to Government and Binding Theory*. Cambridge: Basil Blackwell

Haegeman, Liliane. 1992. *Theory and Description in Generative Syntax: A Case Study in West Flemish*. Cambridge: Cambridge University Press

Haider, Hubert. 1991. The Germanic Verb-Second Puzzle. Review Article. *Linguistics* 29. 703-717.

Haider, Hubert and Martin Prinzhorn (eds.) *Verb Second Phenomena in Germanic Languages*. Dordrecht: Foris.

Hale, Ken. 1982. Some Preliminary Remarks on Configurationality. *Proceedings of the North Eastern Linguistic Society*, 12.

Hale, Ken. 1983. Walpiri and the Grammar of Non-Configurational Languages. *Natural Language and Linguistic Theory*. 1. 5-47.

Hale, Ken and S. Jay Keyser. 1987. A View from the Middle. *Lexicon Project Working Papers* 10, Cambridge: MIT Press

Harbert, Wayne and Almedia Toribio. 1991. Nominative Objects. *Cornell Working Papers in Linguistics*, 9. 127-192.

Harris, A. 1984. Inversion as Rule of Universal Grammar: Georgian evidence. In D. Perlmutter and C. Rosen (eds.), *Studies in Relational Grammar 2*. Chicago: University of Chicago Press. 259-291.

Hendriksen, Hans. 1991. Sentence Position of the Verb in Himachali. *Acta Linguistics Hafniensia*, 22. 159-171.

Hermon, G. 1985. *Syntactic Modularity*. Dordrecht: Foris.

Heycock, Caroline. 1994. Layers of Predication: The Non-lexical Syntax of Clauses. Ph.D. dissertation, University of Pennsylvania, Philadelphia.

Hock, Hans 1982. Aux-cliticization as a Motivation for Word Order Change. *Studies in the Linguistic Sciences* 12, 1. 91-101.

Hock, Hans. 1986. *Principles of Historical Linguistics*. Berlin: Mouton de Gruyter.

Hoeksema, Jack. 1991. Complex Predicates and liberatin in {D}uth and {E}nglish. *Linguistics and Philosophy*, 14. 661-710.

Holmberg, Anders. 1985. Icelandic Word Order and Binary Branching. *Nordic Journal of Linguistics*, 8. 161-195.

Holmberg, Anders. 1986. *Word Order and Syntactic Features in the Scandinavian Languages and English*. Stockholm: Department of General Linguistics, University of Stockholm.

Holmberg, Anders and Christer Platzack. 1991. On the Role of Inflection in Scandinavian Syntax. In Werner Abraham et al. (eds.), *Issues in Germanic Syntax*. Berlin: Mouton de Gruyter. 93-118

Holmberg, Anders and Christer Platzack. 1995. *The Role of Inflection in Scandinavian Syntax*. New York: Oxford University Press.

Hook, Peter. 1984. Further Observations on Kashmiri Word Order. In O.N.Koul and P.E. Hook (eds.) *Aspects of Kashmiri Linguistics*. New Delhi: Bahri. 145-153.

Hook, Peter and A. Manaster-Ramer. 1985. The Position of the Finite Verb in Germanic and Kashmiri. Towards a Typology of V2 Languages. In J.T. Faarlund (ed.), *Germanic Linguistics*. Indiana University Linguistics Club, Bloomington, Indiana. 46-58.

Hook, Peter and O. N. Koul 1992. Reflexive Possessives in Kashmiri and Hindi-Urdu: Evidence for an Antecedency and Hierarchy. *South Asian Language Review*, 2,1. 68-83.

Hooper, J. and S. Thompson. 1973. On the Applicability of Root Transformations. *Linguistic Inquiry*, 12. 55-92.

Hyman, L. 1975. On the Change from SOV to SVO: Evidence from the Niger Congo. In C. Li (ed.) *Word Order and Word Order Change*. Austin: University of Texas Press. 113-47.

Iatridou, Sabine. 1990. About Agr(P). *Linguistic Inquiry*, 21,4. 551-577.

Iatridou, Sabine and Anthony Kroch. 1992. The Licensing of CP-recursion and its Relevance to the Germanic Verb-Second Phenomenon. *Working Papers in Scandinavian Syntax*, 50. 1-24.

Jackendoff, Ray. 1977. *X' Syntax: A Study of Phrase Structure*. Cambridge: MIT Press

Jayaseelan, K. A. 1990. The Dative Subject Construction and the Pro-Drop Parameter. In M.K. Verma and K.P. Mohanan (eds.), *Experiencer Subjects in South Asian Languages*. Stanford: CSLI 260-284.

Jelinek, Eloise. 1984. Case and Configurationality. *Natural Language and Linguistic Theory*, 2. 39-76.

Jónsson, Jóhannes G. 1993. On Case and Agreement in Icelandic. In *University of Massachussetts Occasional Papers*, 17. 85-101.

Kachru, Braj. 1969. *A Reference Grammar of Kashmiri*. Urbana, IL: University of Illinois Press.

Kachru, Braj. 1973. *An Introduction for Spoken Kashmiri*. Urbana, IL:University of Illinois Press.

Kachru, Yamuna. 1966. *An Introduction to Hindi Syntax*. Urbana, IL: Department of Linguistics, University of Illinois.

Kachru, Yamuna. 1970. The Syntax of *ko*-Sentences in Hindi-Urdu. *Papers in Linguistics* 2,2. 299-316.

Kachru, Yamuna. 1990. Experiencer and Other Oblique Subjects in Hindi. In M.K. Verma and K.P. Mohanan (eds.) *Experiencer Subjects in South Asian languages*. Stanford: CSLI. 59-75.

Kachru, Y., B. B. Kachru and T. Bhatia. 1976. The Notion of 'Subject': A note on Hindi-Urdu, Kashmiri and Punjabi. In M. Verma (ed.), *The Notion of Subject in South Asian Languages*. Madison: University of Wisconsin. 79-108

Kayne, Richard. 1981. Unambiguous Paths. In Robert May and Jan Koster (eds.), *Levels of Syntactic Representation.* Dordrecht: Foris. 143-183

Kayne, Richard. 1982. Predicates and Arguments, Verbs and Nouns. Paper presented at the GLOW Conference, Paris.

Kayne, Richard. 1993. Toward a Modular Theory of Auxiliary Selection. *Studia Linguistica*, 47. 3-31.

Kayne, Richard. 1994. *The Antisymmetry of Syntax.* Cambridge, Mass.: MIT Press..

Kempchinsky, Paula. 1988. On Inherent Case-marking. In Hagit Borer (ed.), *Proceedings of West Coast Conference on Formal Linguistics*, 7. 203-215.

Khan, Baber. 1989. Case System in Urdu. Ph. D dissertation, University of Illinois, Urbana, IL.

King, Tracy. 1994. SpecAgrP and Case: Evidence from Georgian. *MIT Working Papers in Linguistics*, 22. 91-110.

Kiss, Katalin, E. 1987. *Configurationality in Hungarain.* Dordrecht: Kluwer.

Kitagawa, Yoshihisa. 1986. Subjects in Japanese and English. Ph.D Dissertation, University of Massachusetts, Amherst.

Kitahara, Hisatsugu. 1997. *Elementary Operations and Optimal Derivations.* Cambridge, MA: MIT Press.

Koizumi, Masatoshi. 1994. Nominative objects: The role of TP in Japanese. In *MIT Working Papers in Linguistics, 24: Formal Approaches to Japanese Linguistics1.*

Koopman, Hilda. 1984. *The Syntax of Verbs.* Dordrecht: Foris.

Koopman, Hilda. 1994. Licensing Heads. In David Lightfoot and Norbert Hornstein (eds.), *Verb Movement.* Cambridge: Cambridge University Press. 261-296.

Koopman, Hilda. 1995. On Verbs That Fail to Undergo V-Second. *Linguistic Inquiry*, 26, 1. 137-163.

Koopman, Hilda and Dominique Sportiche. 1982. Variables and the Bijection Principle. *The Linguistic Review*, 2. 139-160.

Koopman, Hilda and Dominique Sportiche. 1988. Subjects. ms UCLA.

Koopman, Hilda and Dominique Sportiche. 1991. The Positions of Subjects. In J. McCloskey (ed.), *The Syntax of Verb-initial Languages.* Special Issue of *Lingua.* 85. 211-258.

Kornfilt, Jaklin. 1990. Naked partitive phrases in Turkish. ms. Syracuse University.

Kroch, Anthony and Beatrice Santorini. 1991. The Derived Constituent Structure of the West-Germanic Verb-Raising Constructions. In Robert Freidin (ed.), *Principles and Parameters in Comparative Grammar.* Cambridge: MIT Press. 269-338.

Kuroda, Shige-Yuki. 1986. Whether We Agree or Not. ms. UCSD.

Kuroda, Shige-Yuki. 1988. Whether we agree or not: A comparative syntax of English and Japanese. *Lingvisticae Investigationes* 12. 1-47.

Laka, Itziar. 1990. Negation in Syntax: On the Nature of Functional Categories and Projections. Ph.D. dissertation, MIT, Cambridge, MA.

Lambrecht, Knud. 1994. *Information Structure and Sentence Form.* New York: Cambridge University Press.

Larson, Richard. 1988. On the Double Object Construction. *Linguistic Inquiry*, 19. 335-392.

Lasnik, Howard. 1995. Case and Expletive Revisited: On Greed and Other Human Failings. *Linguistic Inquiry*, 26, 4. 615-633.

Lasnik, Howard and Mamoru Saito. 1992. *Move α: Conditions on its Application and Output*. Cambridge: MIT Press

Lawrence, Walter. 1895. *The Valley of Kashmir*. London: Henry Frowde.

Lee, Jeong-Shik. 1992. Case Alternation in Korean: Case Minimality. Ph.D dissertation, University of Conneticut, Storrs.

Leech, R. 1844. A Grammar of the Cashmeeree Language. *Journal of the Asiatic Society*, 13, 1. 397-421.

Levin, Lori and Jane Simpson. 1981. Quirky Case and Lexical Representation of Icelandic Verbs. *Papers from the 17th Meeting of the Chicago Linguistics Society*. 185-196.

Lightfoot, David and Norbert Hornstein (eds.). 1994. *Verb Movement*. Cambridge: Cambridge University Press.

Lowernstamm, J. 1977. Relative Clauses in Yiddish: A Case for Movement. *Linguistic Inquiry*, 3. 197-216.

Lyle, James. 1996. Oblique Subjects and Nominative Anaphors. *Proceedings of the 15th West Coast Conference on Formal Linguistics*, 321-335.

Lyle, James. 1997. Split Ergativity and NP-Movement. *Proceedings of the 14th West Coast Conference on Formal Linguistics*, 587-601.

Mahajan, Anoop. 1990. The A/A-bar Distinction and Movement theory. Ph.D dissertation, MIT, Cambridge, Mass.

Mahajan, Anoop. 1991a. Clitic Doubling, Object Agreement and Specificity. In *Proceedings of the North Eastern Linguistic Society, 21*, GLSA, University of Massachussetts, Amherst.

Mahajan, Anoop. 1991b. Operator Movement, Agreement and Referentiality. In *MIT Working Papers in Linguistics*, 15. 77-96.

Mahajan, Anoop. 1992. The Specificity Condition and the CED. *Linguistic Inquiry*, 23, 3. 510-516.

Mahajan, Anoop. 1994. The Ergativity Parameter: have-be Alternation, Word Order and Split Ergativity. In Merce Gonzalez (ed.), *Proceedings of the North Eastern Linguistics Society*. 317-331.

Mahajan, Anoop. 1995. ACTIVE passives. In *Proceedings of the 13th West Coast Conference on Formal Linguistics*, 286-301.

Maling, Joan and Annie Zaenen (eds.). 1990. *Modern Icelandic Syntax. Syntax and Semantics, vol. 24*. San Diego: Academic Press.

Manning, Christopher. 1996. *Ergativity: Argument Structure and Grammatical Relations*. Stanford: CSLI.

Marantz, Alec. 1991a. Icelandic Quirky Case and the Theory of Double Object Constructions. Paper Presented at the Annual Meeting of the Linguistic Society of America.

Marantz, Alec. 1991b. Case and Licensing. In *Proceedings of the 8th Eastern States Conference on Linguistics*, 234-253.

Masica, Colin. 1976. *Defininig a Linguistic Area: South Asia*. Chicago: University of Chicago Press.

Masica, Colin. 1989. *Indo-Aryan Languages*. Chicago: University of Chicago Press.

May, Robert. 1977. The Grammar of Quantification. Ph.D dissertation, MIT, Cambridge, Mass.

McAlpin, David. 1976. Dative Subjects in Malayalam. In M. K. Verma (ed.), *The Notion of Subject in South Asian Languages*. Madison, WI: University of Wisconsin-Madison.

McNally Louise. 1992. VP-Coordination and the VP-internal Subject Hypothesis. *Linguistic Inquiry*, 23, 2. 336-341.

Miyagawa, Shigeru. 1997. Against Optional Scrambling. *Linguistic Inquiry*, 28,1. 1-25.

Mohanan, K. P. 1983. Lexical and Configurational Structures. *The Linguistic Review*, 3. 113-139.

Mohanan K. P. and Tara Mohanan. 1990. Dative Subjects in Malayalam: Semantic Information in Syntax. In M.K. Verma and K.P. Mohanan (eds.) *Experiencer Subjects in South Asian Languages*. Stanford: CSLI. 43-58.

Moorcraft, Regina. 1995. Clause-level Functional Categories in Germanic V2 Languages. Ph.D. dissertation. University of Toronto, Toronto.

Moorcraft, Regina. 1996. The Meaning of Structural Case. *Toronto Working Papers in Linguistics*, 14, 2. 103-129.

Moravcsik, Edith. 1978. On the Case Marking of Objects. In Joseph H. Greenberg (ed.), *Universals of Human Language*. Stanford: Stanford University Press. 249-290.

Nash, Léa. 1996. The Internal Ergative Subject Hypothesis. In *Proceedings of the North Eastern Linguistic Society, 26*, 195-209.

Noonan, Máire. 1995. VP internal and VP external AGRoP: Evidence from Irish. In *Proceedings of the13th West Coast Conference on Formal Linguistics*, 318-333.

Pesetsky, David. 1987. *Wh*-in-situ: Movement and Unselective Binding. In Eric J. Reuland and Alice G.B. ter Meulen (eds.), *The Representation of (In)definiteness*. Cambridge, MA: MIT Press. 98-129.

Pesetsky, David. 1990. Language-Particular Processes and the Earliness Principle. ms. MIT, Cambridge, MA.

Pintzuk, Susan. 1991. Phrase Structures in Competition: Variation and Change in Old English Word Order. Ph.D. dissertation. University of Pennsylvania, Philadelphia.

Pireiko, L.A. 1968. *Osnovnye Voprosy Ergativnosti na Materiale Indoiranskikh Jazykov (General Problems of Ergativity in Indo-Aryan and Iranian)*. Moscow: Academy of Sciences.

Platzack, Christer. 1983. Germanic Word Order and the COMP/INFL Parameter. *Working Papers in Scandinavian Syntax 2*. Department of Linguistics, University of Trondheim.

Platzack, Christer. 1986a. The Position of the Finite Verb in Swedish. In H. Haider and M. Prinzhorn (eds.), *Verb Second Phenomena in Germanic Languages*. Dordrecht: Foris. 27-48.

Platzack, Christer. 1986b. Comp, Infl, and Germanic Word Order. In L. Hallen and K.K. Christensen (eds.), *Topics in Scandinavian Syntax*. Dordrecht: Reidel.

Poletto, Cecilia. 1990. L'Inversione Soggetto Clitico/Verbo nelle Interrogative in Veneto. ms, University of Venice.

Pollock, Jean-Yves. 1989. Verb Movement, UG and the Structure of IP. *Linguistic Inquiry*, 20. 365-424.

Prince, Alan and Paul Smolensky. 1993. Optimality Theory: Constraint Interaction in Generative Grammar. Ms. Rutgers U

Radford, Andrew. 1988. *Transformational Grammar* Cambridge: Cambridge University Press.

Radó, Janina. 1993. Object Positions, Interpretation and Agreement in Hungarian. *University of Massachussetts Occasional Papers*, 17. 131-152.

Raina, Achla 1991. An S-Selection Approach to Grammar: Some Issues in Kashmiri Syntax. Ph. D dissertation, Indian Institute of Technology, Kanpur, India.

Rambow, Owen and Beatrice Santorini. 1995. Incremental Phrase Structure Generation and a Universal Theory of V2. In Jill N. Beckman (ed.), *Proceedings of North East Linguistic Society 25*. Amherst, Mass.: GLSA. 373-387.

Reinholtz, Charlotte. 1991. Verb-Second in Mainland Scandinavian: A Reanalysis. *Proceedings of the 9th West Coast Conference on Formal Linguistics*. Stanford: Stanford Linguistics Association. 459-475.

Reinholtz, Charlotte. 1993. Verb Second, Negation, and Minimality in Danish. In Jonathan Mead (ed.) *Proceedings of the Eleventh West Coast Conference on Formal Linguistics*. Stanford: CSLI. 405-420.

Rizzi, Luigi. 1989. Speculations on Verb-Second. ms. Universite de Geneve.

Rizzi, Luigi. 1990. *Relativized Minimality*. Cambridge, MA: MIT Press.

Rizzi, Luigi and Ian Roberts. 1989. Complex Inversion in French. *Probus*, 1. 1-31.

Rognvaldsson, E. and H. Thráinsson. 1990. On Icelandic Word Order Once More. In Joan Maling and Annie Zaenen (eds.), *Modern Icelandic Syntax. Syntax and Semantics, vol. 24*. San Diego: Academic Press. 3-40.

Rosen, Carol and Kashi Wali. 1989. Twin Passives, Inversion and Multistratalism in Marathi. *Natural Language and Linguistic Theory*, 7. 1-50.

Rothstein, Susan. 1983. The Syntactic Forms of Predication. Ph. D dissertation, MIT, Cambridge, Mass.

Rudin, Cathy. 1981. Who What to Whom said?: An Argument from Bulgarian against Cyclic Wh-movement. *Proceedings of* Chicago Linguistics Society *17*. 353-360.

Runner, Jeffrey T. 1994. A Specific Role for AGR. *University of Massachussetts Occasional Papers*, 17.

Safir, Ken. 1982. Inflection Government and Inversion. *The Linguistic Review*, 1. 417-467.

Saksena, A. 1981. Verb Agreement in Hindi. *Linguistics*, 19. 467-474.

Santorini, Beatrice. 1989. The Generalization of the Verb-Second Constraint in the History of Yiddish. Ph. D dissertation, University of Pennsylvania, Philadelphia, PA.

Santorini, Beatrice. 1990. The History of the Verb-Second Constraint in Yiddish. ms. University of Pennsylvania.

Santorini, Beatrice. 1994. Some Similarities and Differences between Icelandic and Yiddish. In David Lightfoot and Norbert Hornstein (eds.) *Verb Movement.* Cambridge: Cambridge University Press. 87-106.

Schütze, Carson. 1993. Towards a Minimalist Account of Quirky Case and Licensing in Icelandic. In Colin Phillips (ed.), *MIT Working Papers in Linguistics,* 19. 321-375.

Schütze, Carson T. 1996. When a Subject isn't Nominative: Icelandic and the Parameters of Case Theory. ms. MIT, Cambridge, MA.

Schwartz, A. 1972. The VP Constituent of SVO Languages. *Syntax and Semantics, vol. 1.* New York: Academic Press.

Sells, Peter. 1985. *An Introduction to Contemporary Linguistic Theories.* Stanford: CSLI

Sells, Peter. 1992. Nominative Objects in Japanese and Korean. ms. Stanford University.

Shlonsky, Ur. 1991. Strategies of *Wh*-Movement in Palestinian Arabic. ms. Universite' du Quebec `a Montreal.

Shlonsky, Ur. 1996. Subject Agreement and the IP Sandwich. In *Proceedings of the North East Linguistic Society 26,* 367-376.

Sigurðsson, Halldor. 1989. Verbal Syntax and Case in Icelandic Syntax. Ph.D dissertation, University of Lund, Lund.

Sigurðsson, Halldor. 1991. Icelandic Case-marked PRO and the Licensing of Lexical A-Positions. *Natural Language and Linguistic Theory,* 9. 327-363.

Speas, Margaret. 1990a. *Phrase Structure in Natural Language.* Dordrecht: Kluwer

Speas, Margaret. 1990b. Comments on the papers by James W. Gair, Yamuna Kachru, and K.P. Mohanana and Tara Mohanan. In M. K. Verma and K.P. Mohanan (eds.), *Experiencer Subjects in South Asian Languages.* Stanford University: CSLI. 77-83.

Sportiche, Dominique. 1988. A Theory of Floating Quantifiers and its Corollaries for Constituent Structure. *Linguistic Inquiry,* 19, 3. 425-450.

Sportiche, Dominique. 1995. Sketch of a Reductionist Approach to Syntactic Variation and Dependencies. In Hector Campos and Paula Kempchinsky (eds.), *Evolution and Revolution in Linguistic Theory.* Washington, DC: Georgetown University Press. 356-398.

Sridhar, S. N. 1976. Dative Subjects, Rule Government, and Relational Grammar. *Studies in the Linguistic Sciences* 6, 1.

Sridhar, S. N. 1979. Dative Subjects and the Notion of Subject. *Lingua* 49, 99-125.

Srivastav, Veneeta. 1990. Hindi *wh* and Pleonastic Operators. *Proceedings of the North East Linguistic Society, 20.* 443-457.

Srivastav, Veneeta. 1991. Wh Dependencies in Hindi and the Theory of Grammar. Ph. D dissertation, Cornell University, Ithaca, NY.

Steele, Susan. 1977a. Review of Haiman 1974. *Language.* 53. 209-12.

Steele, Susan. 1977b. Clisis and diachrony. In C. Li (ed.) *Word Order and Word Order Change.* Austin: University of Texas Press. 539-79.

Stowell, Tim 1981. Origins of Phrase Structure. Ph.D dissertation, MIT, Cambridge, Mass.

Subbarao, K. V. 1984. Word Order in Kashmiri: Some Further Evidence. In O.N.Koul and P.E. Hook (eds.), *Aspects of Kashmiri Linguistics*. New Delhi: Bahri. 136-144

Suner, Margarita. 1988. The Role of Agreement in Clitic-Doubled Construction. *Natural Language and Linguistic Theory*, 6. 391-434.

Syeed, S. M. 1984. Morphological Causitives and the Problems of the Transformational Approach. Ph.D Dissertation, Indiana University.

Szabolcsi, Anna. 1981. The Semantics of Topic-Focus Articulation. In J. Groenendijk et al. (eds.), *Formal Methods in the Study of Language*. Amsterdam: Matematisch Centrum

Taraldsen, K., T. 1986. On Verb Second and the Functional Content of Syntactic Categories. In H. Haider and M. Prinzhorn (eds.), *Verb Second Phenomena in Germanic Languages*. Dordrecht: Foris. 7-26.

Taraldsen, Tarald. 1995. On Agreement and Nominative Objects. In Hubert Haider, Susan Olsen, and Sten Vikner (eds.), *Studies in Comparative Germanic Syntax*. Dordrecht: Kluwer. 307-327.

Thiersch, Craig. 1978. Topics in German Syntax. Ph.D dissertation, MIT, Cambridge, Mass.

Thráinsson, Höskuldur. 1986. V1, V2, V3 in Icelandic. In H. Haider and M. Prinzhorn (eds.), *Verb Second Phenomena in Germanic Languages*. Dordrecht: Foris. 169-194.

Thráinsson, Höskuldur. 1994. Comments on the Paper by Vikner. In David Lightfoot and Norbert Hornstein (eds.) *Verb Movement*. Cambridge: Cambridge University Press. 149-162.

Tomaselli, Alessandra. 1989. La Sintassi del Verbo Finito nelle Lingue Germaniche. Ph. D dissertation, University of Pavia.

Trask, R. L. 1979. On the Origins of Ergativity. In F. Plank (ed.) *Ergativity*. New York: Academic Press. 385-404.

Travis, Lisa. 1984. Parameters and Effects of Word Order Variation. Ph. D dissertation, MIT, Cambridge, Mass.

Travis, Lisa. 1988. The Syntax of Adverbs. In *McGill Working Papers in Linguistics: Special Issue on Comparative Germanic Syntax*. McGill University. 280-310.

Travis, Lisa. 1991a. Parameters of Phrase Structure and V2 Phenomena. In R. Friedin (ed.), *Principles and Parameters in Cpmparative Grammar*. Cambridge, Mass.: MIT Press. 339-364.

Travis, Lisa. 1991b. Derived Objects, Inner Aspect, and the Structure of VP. Paper Presented at the 21st Meeting of the North Eastern Linguistics Society.

Tunstall, Susanne. 1994. Aspectual Perception Complements and the Theory of Case. In Alice Davison et al. (eds.) *Papers from the Fourth Annual Meeting of the Formal Linguistic Society of Mid-America*. Department of linguistics, University of Iowa. 280-293.

Uriagereka, Juan. 1994. Comments on the Paper by Koopman. In David Lightfoot and Norbert Hornstein (eds.) *Verb Movement*. Cambridge: Cambridge University Press. 297-304.

Vallduví, Enric. 1992. *The Informational Component*. New York: Garland.

van Riemsdijk, Henk and Edwin Williams. 1986. *Introduction to the Theory of Grammar*. Cambridge: MIT Press

Vangsnes, Øystein A. 1995. Referentiality and Argument Positions in Icelandic. *Working Papers in Scandinavian Syntax*, 55. 89-109.

Verma, Manindra, and K. P. Mohanan (eds.). 1990. *Experiencer Subjects in South Asian Languages*. Stanford: CSLI

Vikner, Sten. 1991. Verb Movement and the Licensing of NP-Positions in the Germanic Languages. Ph. D dissertation, Universite' de Geneve.

Vikner, Sten. 1995. *Verb Movement and Expletive Subjects in the Germanic Languages*. New York: Oxford University Press.

Wali, Kashi and Ashok Koul. 1992. Kashmiri Clitics: Playing with Case and Inflection. Paper presented at SALA 14, Stanford University.

Webelhuth, Gert. 1984. German is Configurational. *The Linguistic Review 4*, 203-246.

Webelhuth, Gert. 1989. Syntactic Saturation Phenomena and the Modern Germanic Languages. Ph. D dissertation, University of Massachusetts, Amherst, Mass.

Weerman, Fred. 1989. *The V2 Conspiracy*. Dordrecht: Foris.

Wierzbicka, Anna. 1981. Case Marking and Human Nature. *Australian Journal of Linguistics*, 1, 1.

Williams, E. 1980. Predication. *Linguistic Inquiry* 11. 203-238.

Williams, Edwin S. 1983. Against Small Clauses. *Linguistic Inquiry*, 14. 287-308.

Woolford, Ellen. 1991. VP-Internal Subjects in VSO and Non-Configurational Languages. *Linguistic Inquiry*, 22. 503-540.

Wunderlich, Dieter. 1997. Cause and the Structure of Verbs. *Linguistic Inquiry*, 28, 1. 27-68.

Yip, M., Joan Maling, and Ray Jackendoff. 1987. Case in Tiers. *Language* 63. 217-250.

Yoon, James H-S. 1989. Korean Nominalizations and Morphosyntactic Interface. In D. Gerdts, C-M. Lee and J. H-S. Yoon (eds.), *Korean Syntax: Issues and Perspectives*. San Diego: Academic Press.

Yoon, James H. 1996. Ambiguity of government and the chain condition. ms. University of Illinois, Urbana-Champaign. [To appear. *Natural Language and Linguistic Theory*]

Zaenen, Annie. 1985. Extraction Rules in Icelandic. New York: Garland.

Zaenen, A., and Joan Maling. 1984. Unaccusative, Passive, and Quirky Case. Proceedings of *WCCFL IV*, 137-152.

Zaenen, A., Joan Maling, and H. Thrainsson. 1985. Case and Grammatical Function: The Icelandic Passive. *Natural Language and Linguistic Theory*, 3. 441-483.

Zagona, Karen. 1982. Government and Proper Government of Verbal Projections. Ph.D dissertation, University of Washington, Washington.

Zakharyin, Boris. 1984. Kashmiri and the Typology of South Asian Languages. In Omkar N. Koul and Peter E. Hook (eds.) *Aspects of Kashmiri Linguistics*. New Delhi: Bahri. 27-46.

Zwart, C. Jan-Wouter. 1993. Verb Movement and Complementizer Agreement. In Jonathan D. Bonbaljik and Colin Phillips (eds.) *Papers on Case and Agreement I. MIT Working Papers in Linguistics, 18.* 297-341.

Zwart, C. Jan-Wouter. (to appear). Dutch is Head-Initial. *The Linguistic Review.*

Language Index

Arabic 13
Ashkund 24

Baltic languages 25
Bantu 1
Bashgali 24
Bulgarian 112

Chinese 62, 156

Danish 131n, 132, 160-61, 258-59
Dardic languages 22, 24
Dogri 22
Dutch 3, 3n, 7-8, 72, 81-84, 133-34, 144-45, 160-61, 183, 257-59, 261-63, 262n

English 1, 2, 19, 24, 37, 45, 48, 58, 74, 77, 79, 80, 80n, 99, 119, 141n, 142n, 143-44, 152, 157, 163, 175, 241, 258-59
English, Old 119n

French 1, 19, 258, 263
French, Old 119n
Frisian 131n, 164-65, 183, 258

Georgian 189, 189n

German 2, 3, 3n, 7-8, 72, 81-84, 90n, 97, 131, 134, 141n, 143-44, 146-47, 151, 157, 164, 167, 183-84, 184n, 223n, 250, 257-58, 263
Germanic 1, 2-6, 7-8, 20, 25, 80-84, 131-51 *passim*, 155-56, 167-68, 261
Gujuri 24

Himachali, dialects of
  Koci 24, 256-57
  Kotgarhi 24, 256-57
Hindi 13, 28, 56, 76n, 86, 175, 182-84, 185n, 190, 208n, 217n, 221, 224n, 227, 228, 244, 244n, 247-48, 251, 263
Hindi-Urdu 26, 184n, 248n
Hungarian 62, 112, 159, 182, 184-85

Icelandic 2-4, 5, 6, 7-8, 40, 83, 97, 120-21, 136-38, 141n, 143, 146-51, 157, 166-68, 184, 184n, 190, 202-204, 216-17, 217n, 221, 224n, 227, 250, 253-54, 257-58
Imbabura Quechua 189
Indian languages 22n, 24n, 190n
Indic 158, 170

Indic languages 6n, 48, 52
Indo-Aryan languages 1, 2, 7, 22, 24, 25, 35, 38, 208n, 262
Inuit 221, 227, 252
Irish 13
Italian 191, 200n, 217n, 228, 241, 250

Japanese 13, 45n, 62, 152-54, 159, 181, 184, 184n, 217n, 221, 250, 254-55
Jingulu 49
Jiwalri 49

Kannada 190, 202n, 204
Kashmiri, dialects of
  Hindu (Sanskritized) Kashmiri 23
  kamra:z 23
  Kishtwari 23, 23n, 24
  mara:z 23
  Musalmaan (Persianized) Kashmiri 23
  Poguli 23
  Rambani 23
  Siraji 23
  yamra:z 23
Korean 144, 152-56, 159, 161, 163
Kurdish 248

Malayalam 45n, 241, 242
Marathi 202n, 204
Mohawk 45n

Niger-Congo languages 25
Norwegian 81-82, 134, 160-61, 258

Old English 119n
Old French 119n
Oriya 52

Pahari 22
Pama-Nyungan languages 257
Papago 257
Pashai 24
Pashto 248
Persian 23, 24
Pimic languages 257
Pisacha languages 24
Polish 227
Pomo, Eastern 227
Portuguese 228
Prakrit 24n
Punjabi (Punjabee) 22, 23n

Quechua 163, 204
Quechua, Imbabura 189

Romance languages 25, 263

Sanskrit 23, 24, 24n
Scandinavian, Mainland 164
Scandinavian languages 99
Shina 24
Slavic languages 25
Swedish 81-82, 96n, 99, 131n, 133-134, 144, 145n, 160-61, 258

Tibeto-Burman languages 22
Turkish 184

Uto-Aztecan 257

Walpiri 45n, 49, 257
Welsh 13

Yiddish 2-4, 7-8, 83, 120-21, 136-41, 141n, 143-44, 146-51, 157, 166-68, 257-58, 260

Name Index

Abney, Steve 95
Adams, Marianne Patalino 119n
Anagnostopoulou, Elena 181, 184, 184n, 185n
Anderson, T. 246
Andersson, L.-G. 99
Andrews, Avery 203, 216
Authier, J.-Marc 147, 165

Baker, Mark 1, 14-15, 45n, 72, 246
Baltin, Mark 156n
Bayer, Josef 77
Belletti, Adriana 191, 200n, 228, 229, 241, 250
Benveniste, Emil 246
Besten, Hans den 80, 82, 94, 131, 133, 250, 250n, 254, 254n
Bhatt, Rajesh 181, 184, 184n, 185n
Bhatt, Rakesh 151, 202n, 227
Bittner, Maria 227, 228n
Bobaljik, Jonathon D. 230
Bok-Bennema, R. 252
Bresnan, Joan 151
Brody, Michael 62
Burton, Strang 13n
Burzio, Luigi 216, 217n, 220, 222n, 227-28, 228n, 253
Butt, Miriam 182, 248n

Cardinaletti, Anna 5
Carrier-Duncan, Jill 229
Chatterji, Suniti Kumar 24
Chomsky, Noam 4-19 *passim*, 45, 46n, 53, 69, 82, 93, 101, 101n, 115, 118n, 134, 141, 143, 151, 154, 166, 180, 180n, 183-84, 212-22 *passim*, 229, 233n, 243, 250, 258, 260, 261
Collins, Chris 230, 230n, 232n
Cowper, Elizabeth 200n, 220, 233, 250

Dasgupta, Probal 262
Davison, Alice 77, 78, 170, 233
DeHaan, Germen 164, 164n
De Hoop, Helen 182-84
Deprez, Viviane 13, 13n, 177n
Diesing, Molly 2-3, 80, 83, 136-41, 150, 150n, 166, 171, 175, 175n, 181-84
Dubinsky, Stanley 217n, 250, 254, 254n

Enç, Murvet 184

Farmer, Ann 46
Fodor, Jerry D. 175
Freeze, Ray 262
Freidin, Robert 216, 220

Fukui, Naoki 134n, 138, 181, 181n, 219, 229

Gair, James 38, 170
Garret, Andrew 246
Georgopoulos, Carol 221n
Givon, Talmy 25
Grierson, G. M. 22, 23, 23n, 24, 44n, 121n
Grimshaw, Jane 13n, 44n, 210n, 229, 243-46, 255

Haeberli, Eric 262n
Haegeman, Liliane 19, 94, 94n, 262n
Haider, Hubert 1, 2, 72, 80, 80n, 131, 140, 141n
Hale, Ken 45-47, 227, 228n
Harbert, Wayne 220, 233, 253, 250
Harris, A. 189n
Hendriksen, Hans 256-57
Heycock, Caroline 15n
Hock, Hans 25, 86n
Hoeksema, Jack 96n
Holmberg, Anders 80, 99, 164, 167n, 177, 183, 220, 258
Hook, Peter 22n, 44n, 54, 98
Hooper, J. 99
Hornstein, Norbert 1, 3
Hyman, L. 25

Iatridou, Sabine 147-48, 156n, 164-65, 219

Jackendoff, Ray 45, 233
Jayaseelan, K. A. 170
Jelinek, Eloise 46
Jonas, Dianne 230
Jónsson, Jóhannes G. 227

Kachru, Braj 23, 23n, 24n, 25, 38, 44n, 208
Kachru, Yamuna 233
Kayne, Richard 19, 258, 261-63
Kempchinsky, Paula 228
Khan, Baber 38, 76n, 244
King, Tracy 219, 248n
Kiss, Katalin E. 91, 112, 112n
Kitagawa, Yoshihisa 13, 138, 229
Kitahara, Hisatsugu 184
Koizumi, Masatoshi 166, 233n
Koopman, Hilda 1, 5, 13, 13n, 57, 64, 138, 221, 229, 259, 262n
Kornfilt, Jaklin 184
Kosmeijer, Wim 183
Koster Jan 262
Koul, Ashok 35
Koul, O. N. 24, 54
Kroch, Anthony 124, 147-48, 156n, 164-165
Kuroda, Shige-Yuki 13, 181, 229

Laka, Itziar 148
Lambrecht, Knud 89n
Larson, Richard 231, 232n
Lasnik, Howard 62, 111, 180, 224
Lawrence, Walter 22n, 24n
Lee, Jeong-Shik 254n
Leech, R. 22n, 23n, 24
Levin, Lori 255
Lightfoot, David 1, 3
Lowenstamm, J. 140n
Lyle, James 228, 248

Mahajan, Anoop 86, 172, 177n, 180, 182, 183, 184, 184n, 217n, 224, 224n, 227-28, 228n, 244, 247-48, 247n, 251, 262-63
Maling, Joan 6, 121n, 203, 220, 223n, 227, 233
Manning, Christopher 28
Marantz, Alec 200n, 220, 233, 250
Masica, Colin 2, 44n, 233
May, Robert 87, 87n
McAlpin, David 233
McNally, Louise 13n
Miyagawa, Shigeru 184, 184n

Mohanan, K. P. 46, 49, 170, 190n, 233, 239, 241-42, 248n
Mohanan, Tara 239, 241-42, 244n, 248n
Moorcraft, Regina 181n, 182, 184, 184n, 220 Moravcsik, Edith 38

Nash, Léa 228n
Noonan, Máire 227

Pesetsky, David 223
Pintzuk, Susan 119n
Pireiko, L. A. 246
Platzack, Christer 5, 80, 96n, 99, 133, 145n, 160, 183, 258
Pollock, Jean-Yves 1, 143, 154
Prince, Alan 228n
Prinzhorn, Martin 1, 2, 72, 80, 131, 140

Radford, Andrew 96
Radó, Janina 182, 184-85
Raina, Achla 25, 43-45, 46n, 51-57, 63-64, 79
Rambow, Owen 3n, 164-65, 164n
Reinholtz, Charlotte 148, 164, 258-59
Rizzi, Luigi 80, 80n, 146, 191, 200n, 228, 229, 241, 250
Roberts, Ian 5, 146
Rognvaldsson, E. 120-21, 136, 166-67, 167n
Rosen, Carol 170, 202n
Rothstein, Susan 15
Rudin, Cathy 112
Runner, Jeffrey T. 181n, 182, 182n, 184n

Sag, Ivan 175
Saito, Mamoru 62, 111
Saksena, A. 38
Santorini, Beatrice 2-3, 3n, 5, 80, 83, 116n, 119-21, 121n, 123-24, 134n, 136-38, 150n, 164-65, 164n, 260
Schmidt, Ruth L. 24
Schütze, Carson T. 217n, 220
Schwartz, A. 262
Sells, Peter 250
Shlonsky, Ur 173n, 180n, 219
Sigurdsson, Halldor 220, 224n, 227, 233, 250, 253-54, 254n
Simpson, Jane 255
Smolensky, Paul 228n
Speas, Margaret 11n, 13n, 15, 20, 45-46, 138, 229, 229n, 241-42
Sportiche, Dominique 13, 13n, 57, 138, 172-73, 184, 221, 229
Sprouse, Rex 216, 220
Sridhar, S. N. 170, 190, 202n, 233
Srivastav, Veneeta 76n
Steele, Susan 25
Stowell, Tim 76-77, 96
Subbarao, K. V. 44n
Suñer, Margarita 35
Syeed, S. M. 44n, 196
Szabolcsi, Anna 112n

Taraldsen, Tarald 80, 82, 160, 220, 253
Thiersch, Craig 80, 82
Thompson, S. 99
Thráinsson, Höskuldur 2-3, 6, 83, 120-21, 136-38, 166-67, 167n, 203, 220, 227-28, 230, 230n, 232n, 233
Tickoo, Asha 116n
Tomaselli, Alessandra 5, 80
Toribio, Almeida 220, 233, 250, 253
Trask, R. L. 262
Travis, Lisa 64, 72, 80, 90n, 140n, 171-72, 230, 260-61
Tunstall, Susanne 220

Uriagereka, Juan 259

Vallduví, Enric 89n
Vangsnes, Oystein A. 253
Verma, Manindra 170, 190n, 233
Vikner, Sten 2, 80, 131, 136, 138, 140, 144n, 146-51, 150n, 164, 183

Wali, Kashi 35, 38, 170, 202n
Webelhuth, Gert 46, 48, 77, 94, 177n
Weerman, Fred 80, 132-134, 138, 141n, 141-45, 144n, 154n, 155, 155n, 157, 160, 164, 164n, 165
Wierzbicka, Anna 38
Williams, Edwin S. 15, 45, 96n
Woolford, Ellen 13n
Wunderlich, Dieter 223n

Yip, M. 233
Yoon, James H. 151, 163, 227

Zaenen, Annie 5, 103, 121n, 190, 203, 220, 223n, 227, 233
Zagona, Karen 229
Zakharyin, Boris 24, 263
Zwart, C. Jan-Wouter 5, 258-62, 262n

Subject Index

In this index, *passim* indicates a cluster of references in close but not consecutive order; "def." indicates a definition; "fig." indicates a figural image.

Accusative
  structural, "Last Resort," 223-28
  structural in quirky constructions, 224-26
Accusative Hypothesis, 223-28
  and Kashmiri case arrays, 228-50
Adjective projections (AP) in Kashmiri phrase structure, 67-68
Adverb interpretation, Kashmiri 170-74
Agreement
  AGRP
    object movement, and specificity, 180-85
    nominative Case, 221
  subject-object competition, 226-28
  of verb and NP in Kashmiri, 51-52
Anaphors in Kashmiri, 53-54
Argument, structure, syntactic projection of, 229-30
Aspects of the Theory of Syntax (Chomsky), 9
A-V2 languages, 134-35, (def. and fig.)

Bijection Principle and Kashmiri subject-object asymmetry, 57-60
Binding theory 19 (def.)
  extended to clauses, 141-44
Burzio's generalization and the Accusative Hypothesis, 227-28

Case; *see also* accusative; dative; nominative; quirky
  arrays, Kashmiri (table), 228
  assignment and Kashmiri phrase structure, 64-71, 77
  assignment and quirky Case, 6
  and Checking theory, 214-23
  competition for, by subject and object from AGR, 226-28
  A-movement, 215-17
  generalizations, Kashmiri (list), 218-20
  and grammatical functions, Kashmiri, 230-33, 233-50
  with indirect objects and double object constructions in Kashmiri, 198-200
  Kashmiri, accounted for by Accusative Hypothesis, 228-50
  and object advancement, Kashmiri, 177-85
  theory of, 220-28

Case-Filter, 17-18 (def.)
Case theory, 17-19 (def.)
Case Resistance Principle (CRP) and Kashmiri complement *ki* clauses, 76-77
Causativization in Kashmiri, 211-212, 245-46
Checking theory, cross-linguistic empirical problems with, 213-20
Clauses
  adverbial subordinate, Kashmiri, 83-84
  declarative matrix, V2, Kashmiri, 92-93
  declarative subordinate, V2, Kashmiri *ki*, 98-101
  declarative, V1, Kashmiri, 116-19
  declarative, V3, Kashmiri, 102-107
  embedded, 141-44
  embedded, S-V2 and A-V2, structure of, 156 (fig.)
  embedded topicalized, as assertions, 99-101
  finite complement *ki*, 74-79
  interrogative, Hindi *wh-*, and focus position, 86-87
  interrogative, Kashmiri, and V2 clause-initial position, 96-97
  interrogative, marked in Kashmiri V2, 107-116
  interrogative, V1, Kashmiri, 120-21
  interrogative, V3, Kashmiri, 107-116
  Kashmiri participial *-ith*, and Dative Subject Constructions, 195-96
  main, Kashmiri, and V2 word order, 85-98
  main-(*ki*)subordinate asymmetry, none in Kashmiri, 100-101
  main-subordinate asymmetry, 100-101, 131-35, 157-59
  nonfinite, Kashmiri, 75-79
  nonfinite, Kashmiri, are verb-final, 126-29
  relative and adverbial, 121-26
  relative, Kashmiri, V2 blocked in, 73, 83-84
  small, 96-97
Comp
  and mood markers, 151-68
  as landing site of (Germanic) V2, 131-36
  -ko (Korean), 151-53, 159-61, 163
  separated into Mood and Subordinators, 151-68 *passim*
Complements
  finite, are islands, 128-29
  noun, and Kashmiri phrase structure, 65-68
"Configurationality parameter," brief overview, 45-47
Constituent Fronting and Kashmiri constituency, 60-61
Constrastive topics as left-dislocated constituents in Kashmiri, 91-92
Control Theory, 19-20 (def.)
CP-recursion
  and embedded V2, 146-51
  licensing, 148

Dat, Frisian complementizer, two types, 164-65
Dative
  Case as Goals, 239-42
  not structural in Kashmiri, 223n
  nominals, Kashmiri, subjects at S-Structure, 191-98
  nominals as controlled PRO, 193-95
Dative Subject Constructions (DSCs)
  Case and feature checking account of, 233-50
  dative nominals in
    Retreat analysis of, 190-91, 202n
    base-generated as indirect objects, 198-203
    as derived subjects, 187-204
    as Experiencer argument, 203-204
    as Goal argument, 233-42 *passim*

Dative Subject Constructions (DSCs) (cont.)
examples from various languages, 189-90
Kashmiri, tied to semantic criteria, 233-50
and passivization in Kashmiri, 200-203
Descartes' problem, 9 (def.)
Direct/indirect object asymmetry, Kashmiri, 55-56
Discontinuous expressions, Kashmiri, and configurationality, 46-47, 49-50
Dummy pronoun *yi*, distribution, 97-98
Dummy topic, *yi*, 115
D-Structure, 9, 10, 10n

Earliness Principle 181
ECM in Kashmiri, 197-98
Embedded Dative Subject Constructions in Kashmiri, 217-18
Empty Category Principle (ECP), 15 (def.)
and lack of superiority effects in Kashmiri, 62-64
responsible for filling Spec of IP in Yiddish V2, 139
Enclitics and specific nonnominative theme object NP-marking with dative Case, 28-29
Ergative
not quirky Case, 246-50
subject in transitive perfective clauses, 244-50
subjects as Agents, 244-45
subject constructions, Kashmiri, 204-206
Ergativity, and Kashmiri as S-V-O, 262-63
Event and process readings, and Kashmiri adverbs, 170-74
Existential closure and object movement, Kashmiri, 176-77, 181-82
Experiencer nominal and Dative Subject Constructions, 203-204
Experiencers as Goals, 236-39, 241-42
Extended Projection Principle (EPP), 15 (def.)
and Kashmiri NP movement to subject position, 222

Feature Checking
and Case, separate modules, 220-23
V2 clauses in M°, 101
Focus position
as emphatic and clause-initial in V2, 85-88
as pre-(finite)verbal position in V2, 85-88, 98-101, 104-116
occupied by subjects, adverbs, and (only) nonsubject arguments with focal stress in Kashmiri, 89-90

Genitive Case and Case-stacking in Kashmiri, 32
Goals and Dative Subject Construction dative arguments, 233-42 *passim*
Goals as experiencers, 236-39, 241-42
Government and Binding (GB) theory (Principles and Parameters theory)
Descartes' problem, 9 (def.)
general assumptions, 9-20
Government theory, 15-17 (def.)
and head-order relations, 64
Humboldt's problem (def.), 9, 10
and Kashmiri configurationality, 52-56
and Dative Subject Constructions, 190-91
Plato's problem (def.), 9, 10, 10n

Government and Binding (GB) theory (Principles and Parameters theory) (cont.)
VP-internal subject hypothesis, 13 (def.)

Head-final lexical structure of Kashmiri, 64-71
Head-initial functional structure of Kashmiri, 71-73
Humboldt's problem (def.), 9, 10

Kashmiri, general characteristics
as split ergative language, 35, 41
Case, assumptions regarding, 28
Case declensions, 29-32
Case types and markings, 35-42
clause structure, as configurational, 43 (fig.)
clause-structure, as non-configurational, 44 (fig.)
dative Case conditioned by specificity, 36, 38-40
double object constructions, 40-41
enclitics, 32-35, 35n
morphology, derivational, 26-28
morphology, inflectional, 28-35
negative markers, 33
word order change, 24-25
ki
as Kashmiri marker of subordination (not complementizer), 158
clauses, base-generated as syntactic adjuncts of TP, 74-79
-ko, Korean subordinator 161

Left-dislocated
constituents as contrastive topics in Kashmiri, 91-92
phrases, as extra-clausal adjoined to MP, 102-103
phrases, contrastive, Kashmiri, 102-103, 110
phrases, Kashmiri, 102-107, 110

Lexical Structure (LS) and configurationality, 45-51
"Liberal" asymmetric V2 languages, 3n, 164-65
Logical Form (LF) (def.), 10, 10n

Mapping Principle, 229-30
Minimalist Program, 180-85
Minimality Condition, 17 (def.)
Minimal Link Condition and subject movement to V2 Spec-MP, 89-90
Mood and mood marking, 151-68
obligatory in all clauses, 154-56, 159
verbal and non-verbal, 154-56, 159

Nominalization in Kashmiri, 210-11, 245-46
Nominative
AGR responsible for, in Kashmiri, 218-20
and agreement in Kashmiri, 218-20
assigned by AGRP projection in Kashmiri-like languages, 221
checked by subject in Spec-AgrSP before Spell-Out, 217-18
objects in Hindi, Inuit, Icelandic, and Japanese, 250-55
Nonconfigurationality, Diagnostics of, 46-51
Nonperfective clauses and Kashmiri Case, 230-33
Noun phrase structure, Kashmiri, 65-68
NP movement and Kashmiri configurationality, 50-51

Object(s)
accusative, do not move in Kashmiri, 176-77
advancement, as Case-seeking movement operation in Kashmiri, 177-85

Object(s) (cont.)
and Quantifier Floating in Kashmiri, 172-74
distribution and movement in Kashmiri, 169
movement and specificity in Kashmiri, 174-76, 177-85
Overt complementizers, presence or absence of is unconnected with V2, 83
Overt expletives and Kashmiri configurationality, 46-47, 48-49

Parameter Value Preservation measure 181n (def.)
Passivization
and double object constructions in Kashmiri, 226
in Kashmiri, 206-210, 245-46
and Dative Subject Constructions in Kashmiri, 200-203
Phrases
ad and postpositional, head-final character of, in Kashmiri, 65-67
left-dislocated, as extra-clausal adjoined to MP, 102-103
left-dislocated, contrastive, Kashmiri, 102-103, 110
left-dislocated, Kashmiri, 91-92, 102-107, 110
lexical structure of, Kashmiri, 64-65 (fig.)
noun, are lexically head-final in Kashmiri, 65-68
quantifier (QP), and Kashmiri subject-object asymmetry, 58-60
structure in Kashmiri, 64-71
verb, are lexically head-final in Kashmiri, 68-71
wh-, Kashmiri, 107-116
Phrase Structure (PS) and configurationality, 45-51
Plato's problem (def.), 9, 10, 10n
Predication theory, 15 (def.)
Principles and Parameters theory; *see* Government and Binding (GB) theory
PRO (nonovert pronominal anaphor) 19-20 (def.)
Pro-drop and Kashmiri configurationality, 46-47, 48
Projection principle, 12 (def.)
and configurationality, 46-48
Psych movement in Kashmiri 242-43

Quantifier floating and Kashmiri object movement, 172-74
Quantifier floating by derived (S-Structure) subjects only, in Kashmiri, 191-93
Questions
indirect, and *wh*-movement, 159-61
multiple construction, Kashmiri, with adjuncts, 62-64
wh-, word order in Kashmiri, Icelandic, and Yiddish, 164-67
yes/no, Kashmiri, 120-21
Quirky case and the Kashmiri ergative subject, 246-50

Reflexive-antecedent relationship in Kashmiri, 52-56
Reflexive possessives and binding in Kashmiri, 54-55
Relational Grammar (RG) and Dative Subject Constructions, 190-91
Retreat and dative nominals in Dative Subject Constructions, 190-91, 202n

Small clause members do not form constituent, 96-97
Specificity
and accusative objects in Kashmiri, 176-77
and object movement, 174-76, 177-85, 198-200

Specificity (cont.)
movement and object advancement in Kashmiri, 177-79
S-Structure, 10-12
Stress (focal), and optional verb movement in relative and adverbial clauses, 125-26
Structure Preservation constraint and Kashmiri V-fronting, 93-95
Subject constructions, Kashmiri
ergative, 204-206, 211-12
ergative and dative, differences between, 206-210
Subject position, Kashmiri, 186-212
in finite clauses, Spec-TP, 186-87
Subject-to-subject raising
and A-movement's relation to Case, 215-16
only of derived subjects in Kashmiri, 197
Subordinators, 152-68
and selection, 161
and *wh*-movement in indirect questions, 159-61
Superiority-like Effects, 62-64
S-V2 languages, 135-36 (def.)

Theta Criterion, 14-15 (def.)
Theta grid, or "Predicate Argument Structure" (PAS) (def.), 13n, 15, 15n
and mapping of arguments onto syntax, 229-30
Theta roles, 14 (def.)
and syntactic projection of argument structure, 229-30
Theta theory, 13-15 (def.)
Topicalization
and assertions, 99-101
and interrogative clauses in Kashmiri, 107-111
incompatible with universal quantification, 87
not responsible for XP fronting, 85-88, 101
of subjects and temporal adverbs, 90
rule, in standard account of Germanic V2, 82

Uniformity of Theta Assignment Hypothesis (UTAH), 14-15 (def.)
and mapping of arguments in theta grid onto syntax, 229-30
Universal quantification incompatible with topicalization, 87

Verb(s)
and NP agreement in Kashmiri, 51-52
bridge, 129
describing physical event, Kashmiri, and Dative Subject Constructions, 236-37
of perception, Kashmiri, and Dative Subject Constructions, 234-35
of psychological state, Kashmiri, and Dative Subject Constructions, 237-39
phrase structure, Kashmiri, 68-71
"psych," Kashmiri, and Dative Subject Constructions, 242-43
Verb-first (V1)
frequency in Kashmiri, Yiddish, and Icelandic, 121n
in declarative Kashmiri clauses, 116-19
Verb-fronting rule, in standard account of Germanic V2, 82
Verb-second (V2)
accounts of, in Germanic languages, 131-51
accounts of, in Yiddish and Icelandic, 136-51
and XP movement to clause-initial, 260-61

Verb second (V2) (cont.)
as result of parametrization of Mood and Subordinate marking, 257-59
Case assignment to subject as trigger for, 5-6
comprehensive theory of, 154-68
constraint, in Kashmiri, 71-72
in Germanic languages, 80-82
in non-Germanic languages, 256-57
interrogative clauses marked in Kashmiri, 107
prohibited in Kashmiri, in relative and certain adverbial clauses, 73, 162-64
and temporal adverb movement to clause-initial position in Kashmiri, 89-90
topicalization rule in standard account of, 82
types: A-V2 (asymmetric) and S-V2 (symmetric), 134-36 (def. and figs.)
unaffected by complementizers, in Kashmiri, 99-101
unconnected with presence or absence of overt complementizers, 83
varying accounts of, for different languages, 1-4
verb-fronting rule in standard account of, 82
Verb-third (V3)
declarative clauses in, and discourse connectives, 104
declarative clauses, Kashmiri, 102-107
Vorfeld, Kashmiri
syntactic categories allowed in, 92-97
and V2, 84-116
VP-fronting in Kashmiri, 93-95

Weak crossover (WCO) and Kashmiri subject-object asymmetry, 57-60
wh-
extraction and Kashmiri subject-object asymmetry, 57-60
extraction restricted to complements governed by bridge verbs, 149-50
phrases, Kashmiri, 107-116
movement in indirect questions, 159-61
movement is clause-bounded in Kashmiri finite clauses, except with bridge verbs, 128-29
movement, Kashmiri, 62-64
questions and word order in Kashmiri, Icelandic, and Yiddish, 164-67
Word order
freedom of, and Kashmiri configurationality, 46-48
Kashmiri, change in, 24-25
V2, Germanic, in standard account, 82
and *wh-* questions in Kashmiri, Icelandic, and Yiddish, 164-67

X-Bar (X') Theory 12-13

Yi
(Kashmiri dummy pronoun), distribution of, 97-98
as dummy topic, 115